1 Summary and features

Models	Remarks
KF-(32+18x2)GW/A12	1PH 220-230V 50Hz R22
KF-(32+18x2)GW/NA12	1PH 220-230V 50Hz R407C
GSW(9x3)-22L/A	1PH 220V 60Hz R22
GSW(7x2+12)-22L/A	1PH 220V 60Hz R22

2 Technical and specifications

Model				GSW(9x3)-22L/A	GSW(7x2+12)-22L/A
Function				Cooling	Cooling
Rated voltage				1PH-220V	
Frequency				60Hz	
Capacity			(W)	2500x3	1800x2+3200
Rated power			(W)	1150x3	1350x2
Input power			(W)	946x3	1250x2
Rated current			(A)	4.3x3	5.68x2
Air volume			(m3/h)	480	
Dehumidify volume			(l/h)	1.2	0.7x2+1.4
EER			(W/W)	2.8	2.7
Indoor unit	Model			GSW(9x3)-22L/A(I)	GSW(7x2+12)-22L/A(I)
	Fan motor speed (r/min) (H/M/L)			1160/1010/890	1250±35
	Output power		(w)	14	20
	Working capacity		(uF)	1	1
	Fan type－piece			Cross flow fan-1	
	Diameter-length		(mm)	Φ97 X583	
	Evaporator			Aluminum fin-copper tube	
	Row-fin distance			2-1.4	
	Working area m^2			0.14	
	Swing motor .			MP24GA	
	Fan motor power		(W)	2	
	Fuse		(A)	PCB 3.15A Transformer 0.2A	
	Noise (H/M/L) dB(A)			≤39	≤40
	Outline dimension (W/D/H) (mm)			770X180X250	
	Package dimension (W/D/H) (mm)			855X272X336	
	Net weight			8.5	
Outdoor unit	Model			GSW(9x3)-22L/A(O)	GSW(7x2+12)-22L/A(O)
	Current			26	33
	Throttling method			Capillary	
	Compressor type			Rotary	
	Compressor model			P14S236A1J	PS192F2AA02
	Overload protector			MRA9902	B220-145-241
	Starting method			Capacity	
	Working temperature		(℃)	≤115	
	Condensor			Aluminum fin-copper tube	
	Pipe diameter			Φ9.52	
	Row-fin distance			2-1.6	2-1.8
	Working area m2			0.59	0.59
	Fan motor speed (rpm)			830±20	
	Fan motor power		(W)	68	
	Fan type-piece			Axial flow fan-1	
	Fan blade diameter		(mm)	Φ450	
	Defrost method			Auto defrost	
	Noise		dB(A)	58	
	Outline dimension		(W/D/H) (mm)	950x810x412	
	Net weight		(kg)	89	71
	Refrigerant/refrigerant charge (kg)			R22/0.8x3	R22/1.05x2
Connection pipe	Outer diameter	Liquid pipe	(mm)	Φ6(1/4″)	
		Gas pipe	(mm)	Φ9.52(3/8″)	
	Max. distance	Height	(m)	5	
		Length	(m)	10	

a

Model			KF-(32+18X2)GW/A12		KF-(32+18X2)GW/NA12
Function			Cooling		Cooling
Rated voltage			1PH-220-230V		
Frequency			50Hz		
Capacity		(W)	3200+1800X2		
Rated power		(W)	1400x2		1450x2
Rated current		(A)	5.68x2		5.87x2
Air volume		(m3/h)	400		450
Dehumidify volume		(l/h)	1.2x2+1.4		
EER		(W/W)	2.5		2.4
Indoor unit	Model		KF-(32+18X2)G/A12(18)	KF-(32+18X2)G/A12(32)	KF-(32+18X2)G/NA12
	Fan motor speed	(r/min)	(H/M/L)	1300±35	1150/1075/1000
	Output power	(w)		20	9
	Working capacity	(uF)	1		
	Fan type-piece		Cross flow fan-1		
	Diameter-length	(mm)	Φ97 X583		
	Evaporator		Aluminum fin-copper tube		
	Row-fin distance		2-1.4		
	Working area	m^2	0.14		
	Swing motor		MP24GA		
	Fan motor power	(W)	2		
	Fuse	(A)	PCB 3.15A Transformer 0.2A		
	Noise	(H/M/L) dB(A)	≤37	≤39	≤38
	Outline dimension	(W/D/H) (mm)	770X180X250		
	Package dimension	(W/D/H) (mm)	855X272X336		
	Net weight		8.5		
Outdoor unit	Model		KF-(32+18X2)W/A12		KF-(32+18X2)W/NA12
	Current		31		
	Throttling method		Capillary		
	Compressor type		Rotary		
	Compressor model		RV222H1AA		RV237H01AA
	Starting method		Capacity		
	Working temperature	(℃)	≤115		
	Condensor		Aluminum fin-copper tube		
	Pipe diameter		Φ9.52		
	Row-fin distance		2-1.8		
	Woring area	m^2	0.59		
	Fan motor speed	(rpm)	780		
	Fan motor power	(W)	60		
	Fan type-piece		Axial flow fan-1		
	Fan blade diameter	(mm)	Φ450		
	Defrost method		Auto defrost		
	Noise	dB(A)	58		
	Outline dimension	(W/D/H) (mm)	950x412x810		
	Net weight	(kg)	71		
	Refrigerant/refrigerant charge	(kg)	R22/1.2x2		R407C/1.27x2
Connection pipe	Outer diameter: Liquid pipe	(mm)	Φ6(1/4")		
	Outer diameter: Gas pipe	(mm)	Φ9.52(3/8")		
	Max. distance: Height 5	(m)	5		
	Max. distance: Length	(m)	10		

The technical data are subject to change without notice. Please refer to the nameplate of the unit.

3 Spare part name

N N

Models：KF-(32+18x2)GW/A12 KF-(32+18X2)GW/NA12

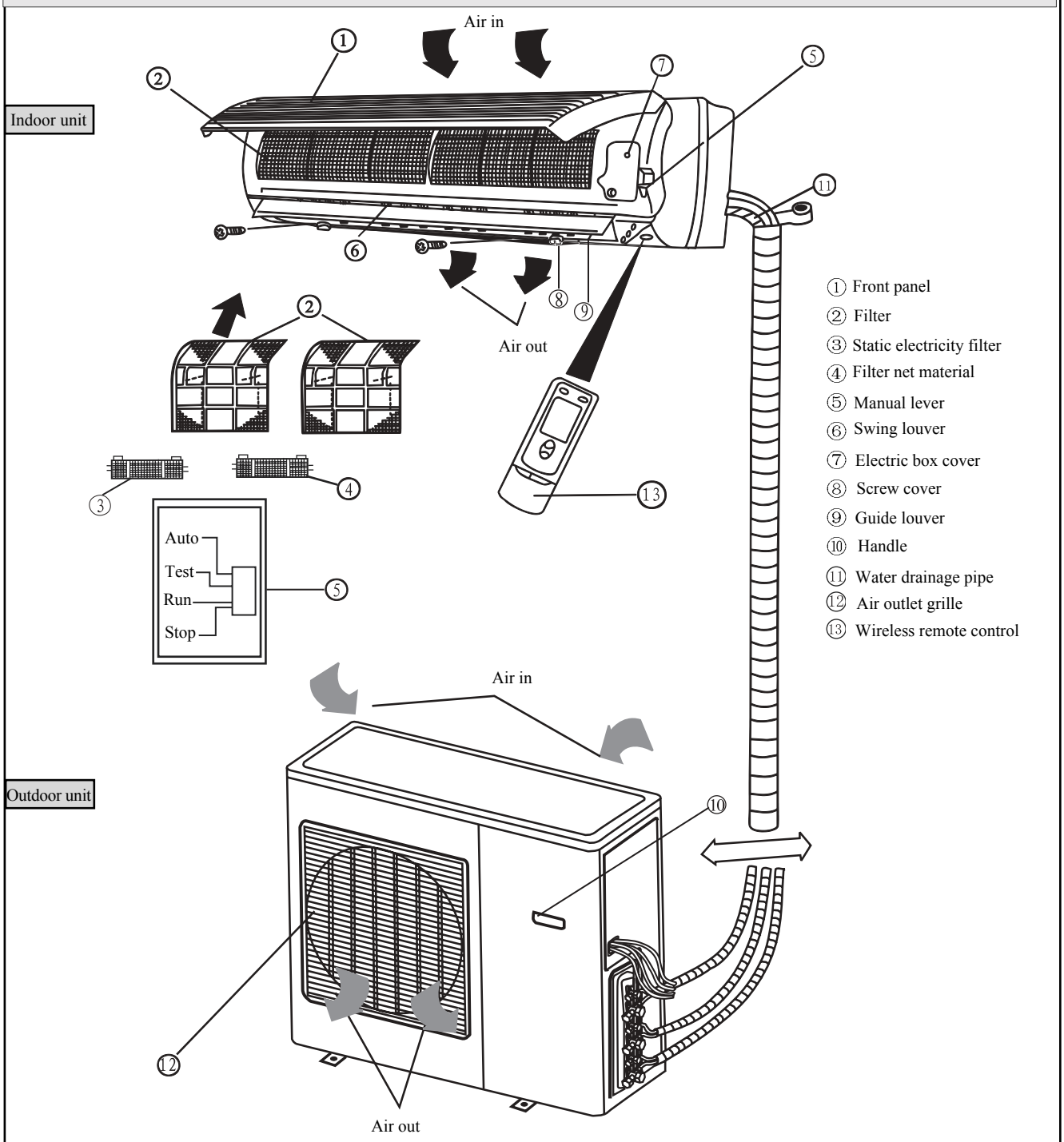

Models：GSW(9x3)-22L/A

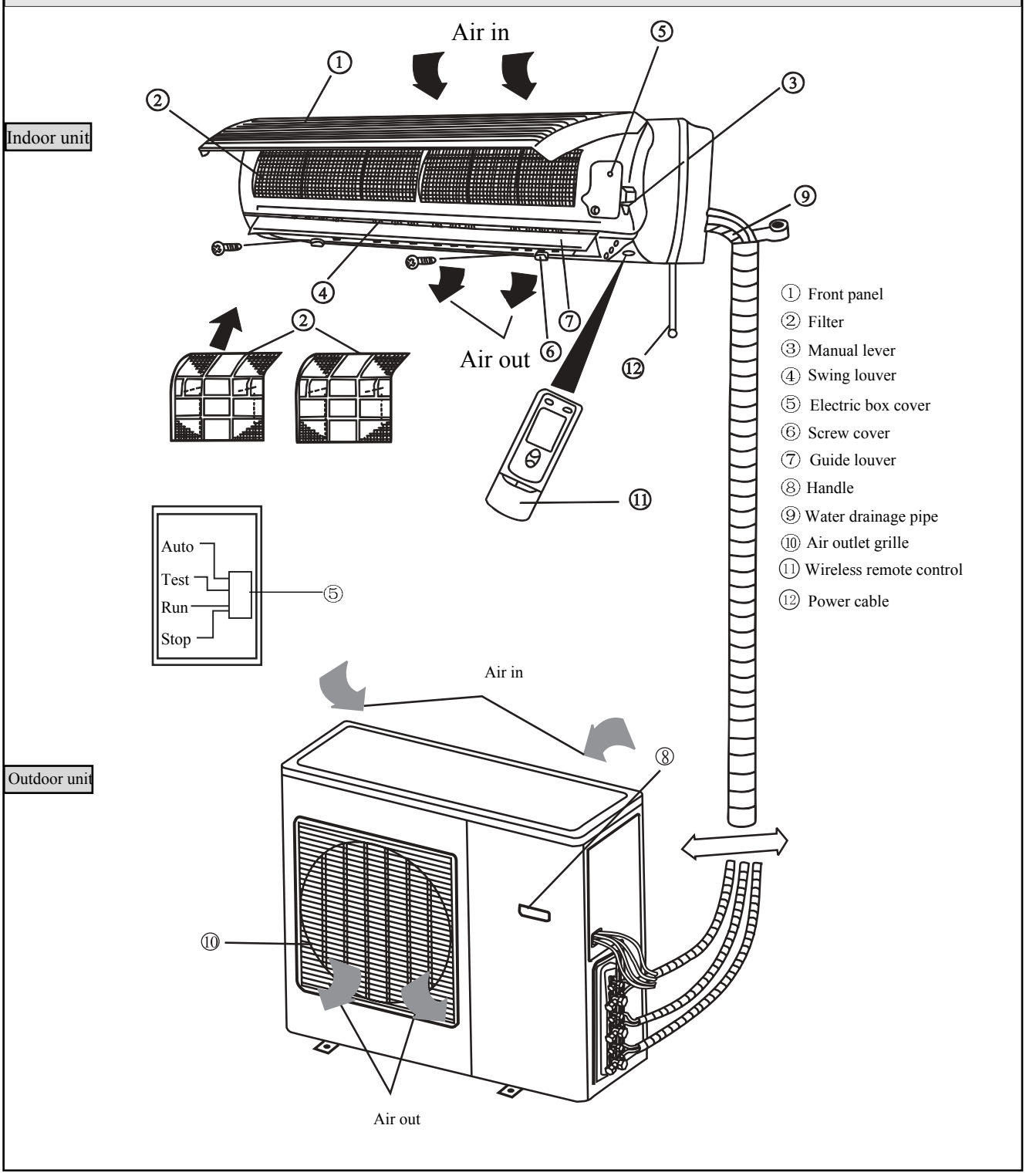

4 Outline and installation dimension

4.1 Outline and installation dimension of indoor unit

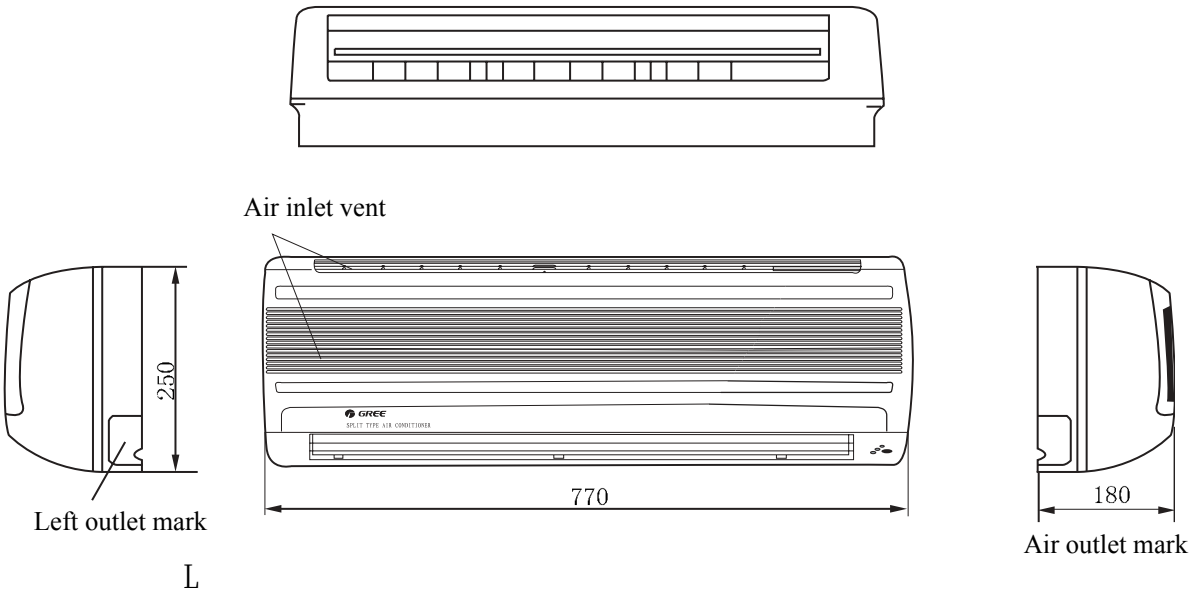

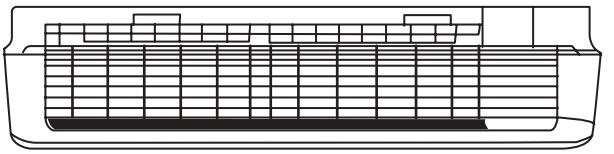

Back view

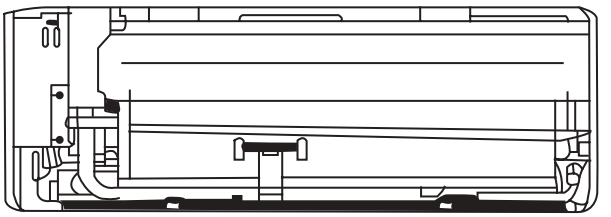

Ceiling

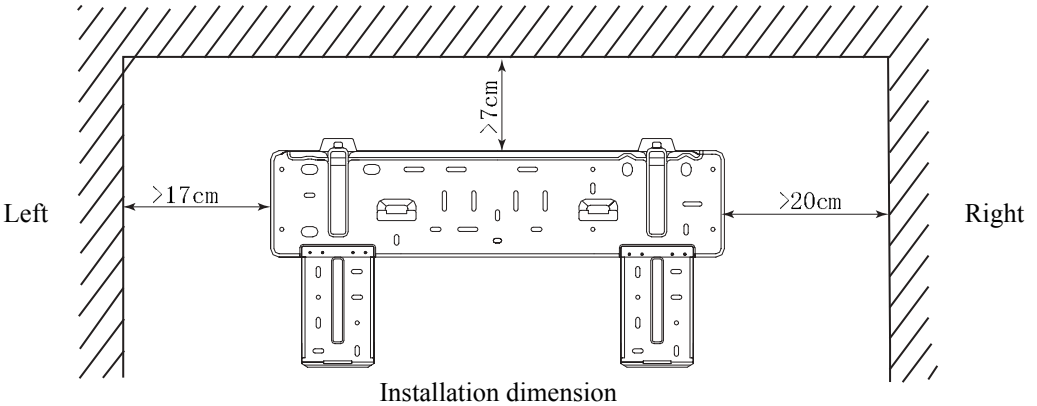

Installation dimension

Models： KF-18x4GW/NA12 KF-18x4GW/A12 GSW(9x3)-22L/A

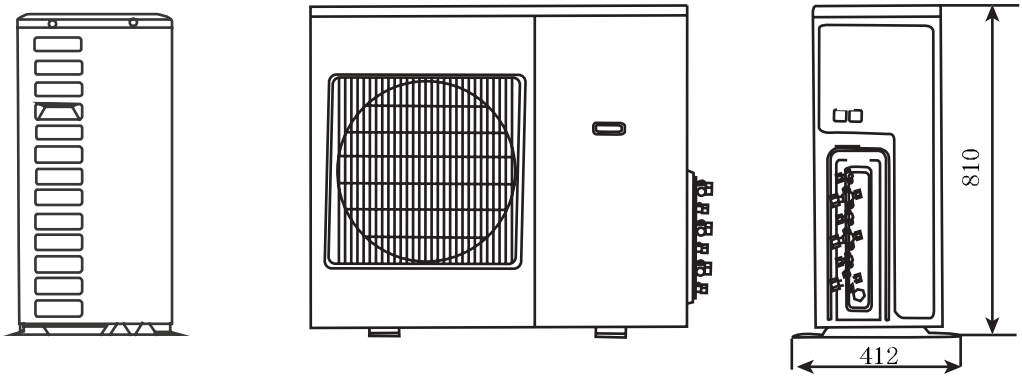

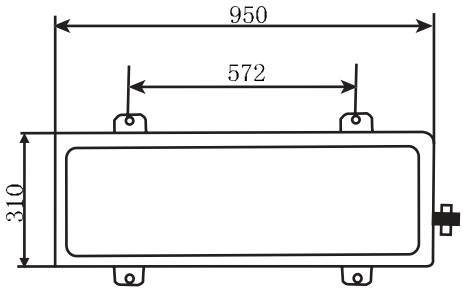

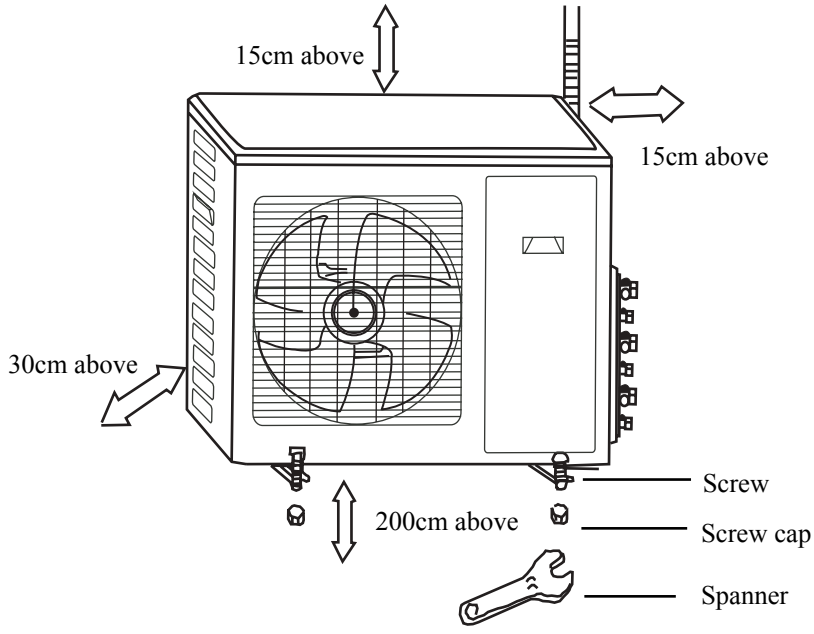

5 Cooling system diagram

5.1 Cooling system diagram for cooling only type

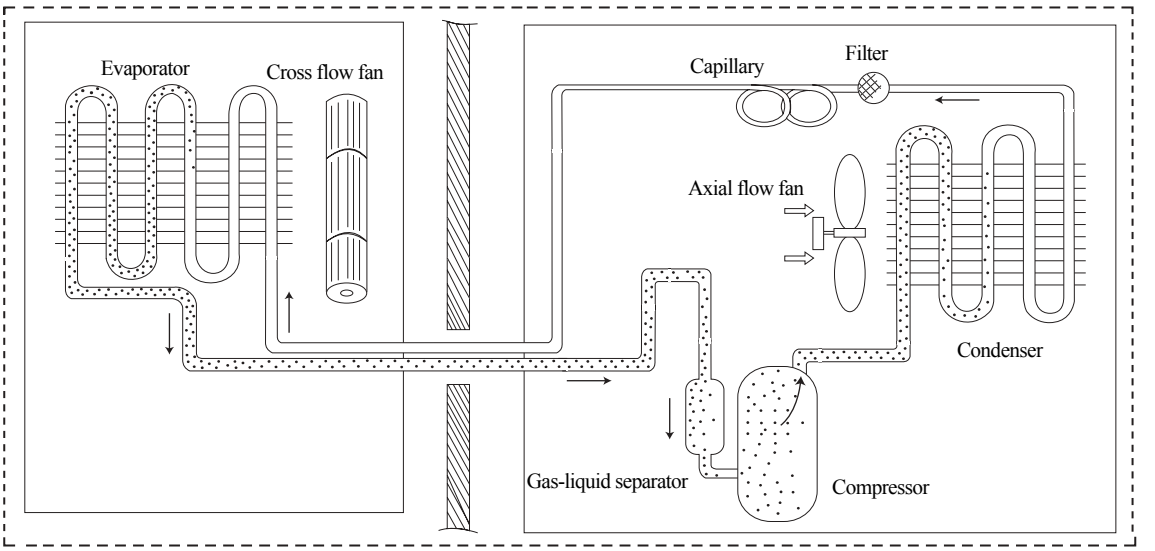

When the power is on, indoor and outdoor units will start to run. The compressor sucks low-pressure refrigerant gas from the evaporator of indoor unit and then discharges high-temperature, high-pressure refrigerant gas into outdoor condenser. Then air exchanges the heat with outdoor air and becomes refrigerant liquid. The liquid is throttled by the capillary and changes into low-temperature and low-pressure liquid and then flows into indoor evaporator. Then liquid exchanges the heat with the required air and changes into low-temperature and low-pressure refrigerant gas. the cycle introduced above goes on and on, and the demanded low temperature environment is maintained.

5.2 Cooling system diagram for cooling/heating type

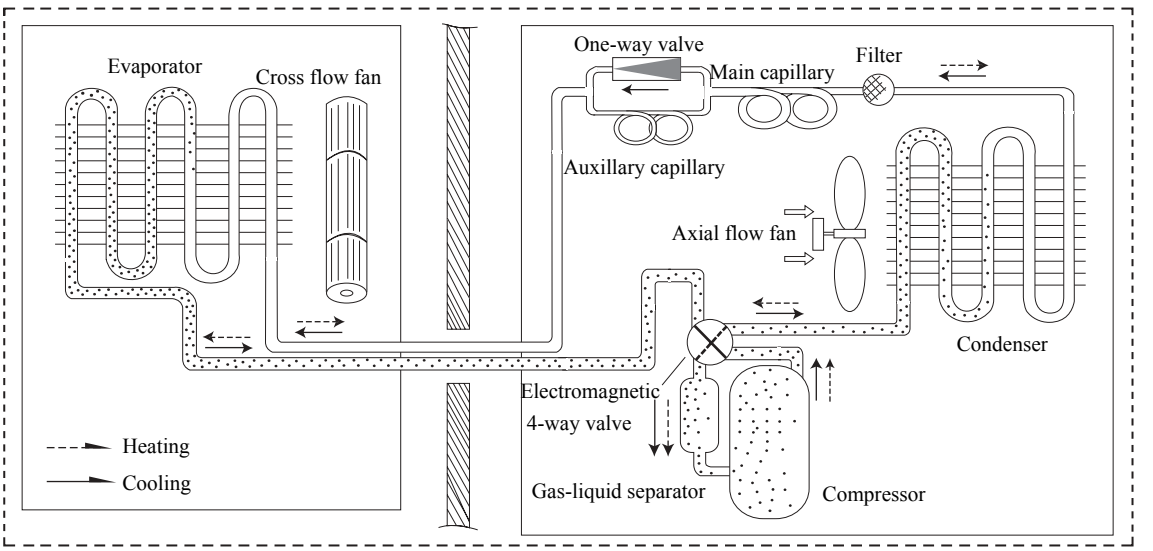

When the power is on, indoor and outdoor units will start to run. When the system operates in cool mode, the compressor sucks low-temperature, low-pressure refrigerant gas from indoor evaporator and then discharges high-temperature, high-pressure refrigerant gas into outdoor heat exchanger. With the help of axial flow fan, the gas transfers its latent heat into outdoor air and becomes high-pressure refrigerant liquid. The liquid is throttled by the capillary and changes into low-temperature and low-pressure liquid and then flows into indoor heat exchanger. With the help of centrifugal fan, the liquid evaporates into low-temperature refrigerant gas and indoor air is cooled down. The refrigerant gas is sucked into the compressor and the cycle introduced above goes on and on, and the demanded low temperature environment is maintained.

When the system operates in heat mode, 4-way valve changes its way and the refrigerant flows in the reversible cycle as the cool mode. The refrigerant discharges its latent heat in the indoor heat exchanger, and sucks heat from outdoor heat exchanger and forms the heat pump cycle. This cycle goes on and on, and the demanded high temperature environment is maintained.

6 Circuit diagram

KF-(32+18X2)GW/A12

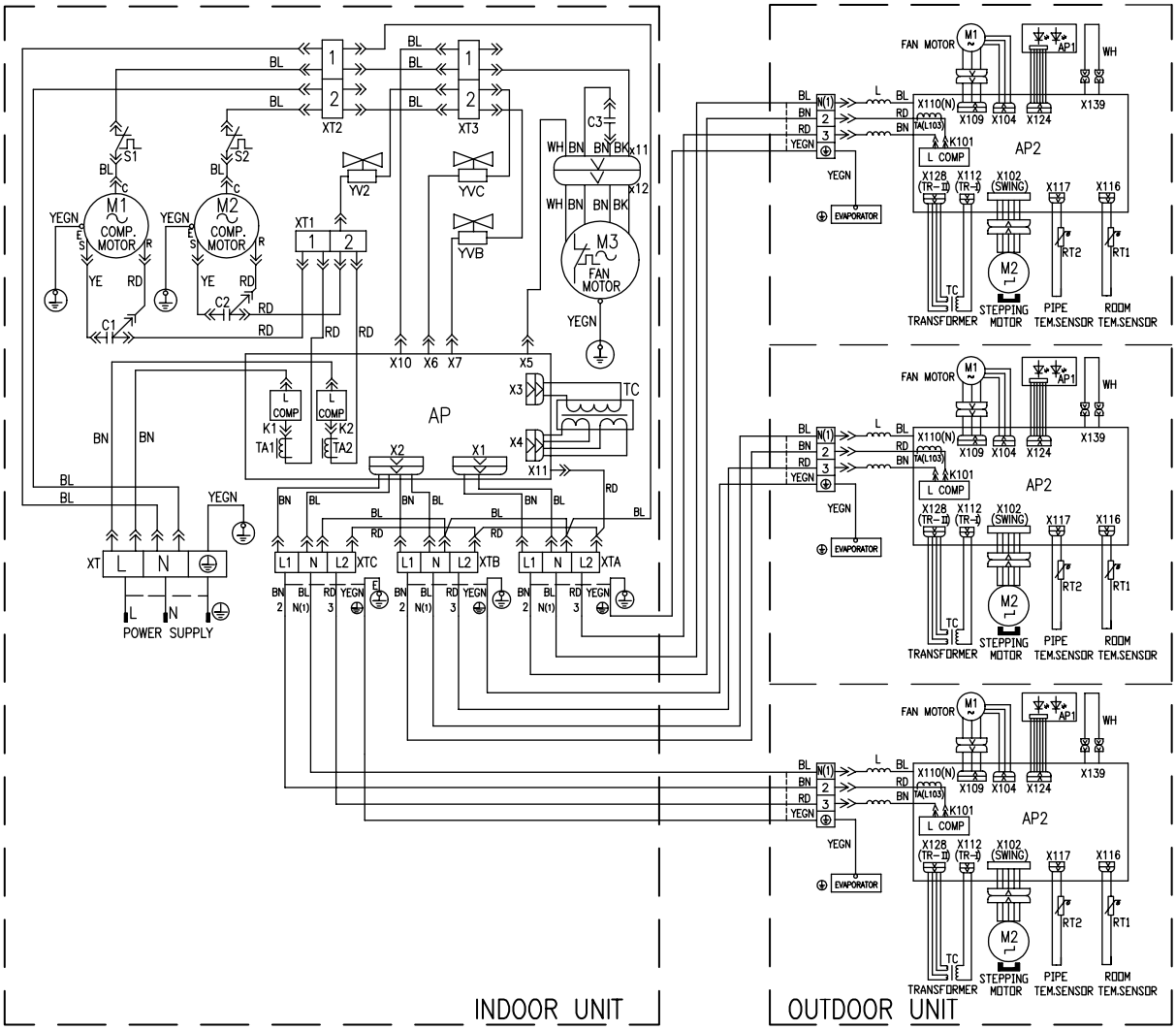

GSW(9X3)-22L/A

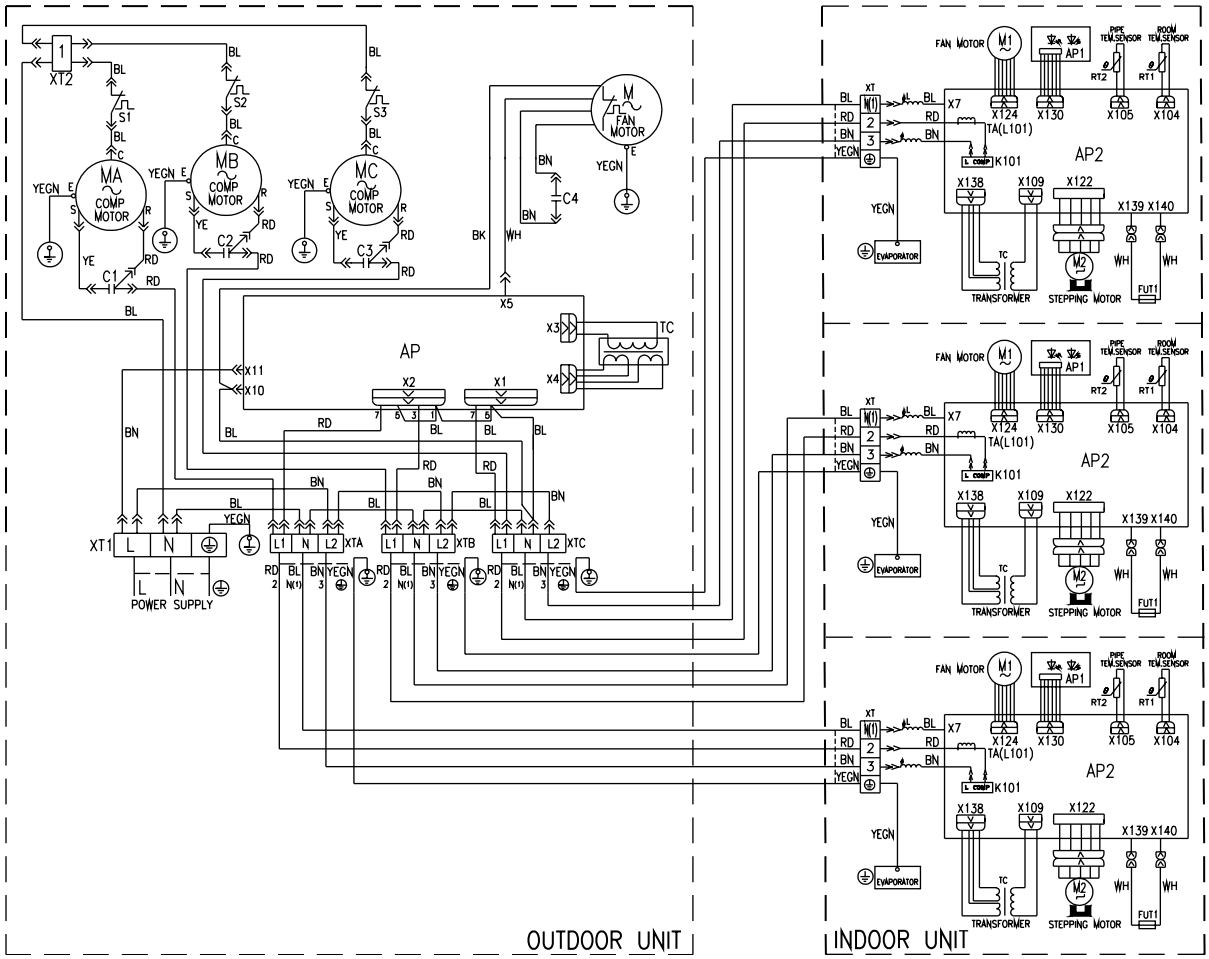
OUTDOOR UNIT
INDOOR UNIT
MA COMP MOTOR
MB COMP MOTOR
MC COMP MOTOR
M FAN MOTOR
AP
AP1
AP2
XT1
XT2
XTA
XTB
XTC
POWER SUPPLY
FAN MOTOR
PIPE TEM.SENSOR
ROOM TEM.SENSOR
TRANSFORMER
STEPPING MOTOR
EVAPORATOR
K101
TA(L101)
FUT1

KF-(32+18X2)GW/NA12

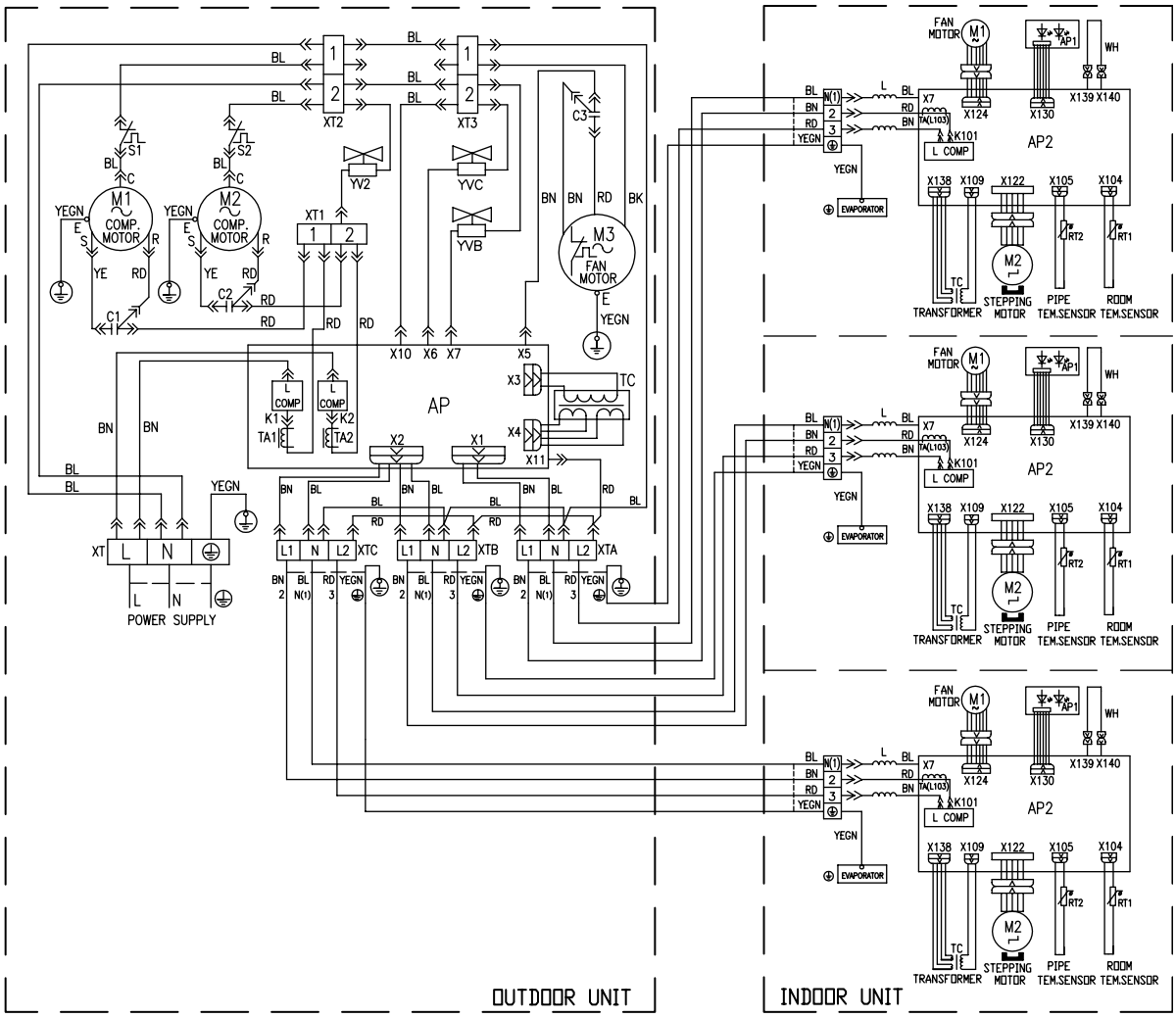

GSW(12+7X2)22L/A12

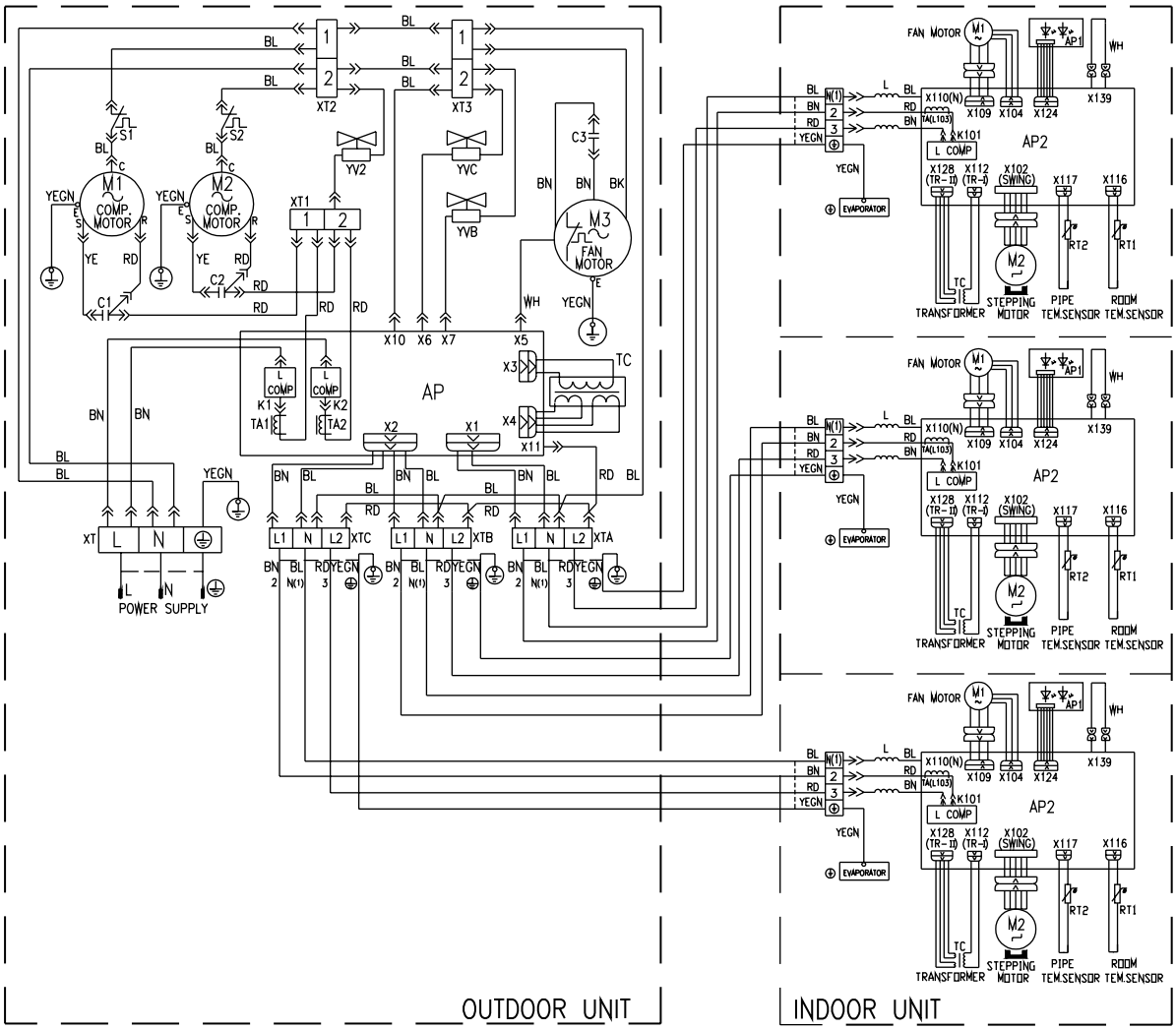

7 PCB function manual and operation method

7.1 PCB function manual 1

KF-(32+18 × 2)GW/NA12 GSW(9 × 3)-22L/A

7.1.1 Temperature parameter

- The room set temperature: (Tset)
- The room ambient temperature:(Tamb)
- The evaporator tube temperature: (Ttube)
- The condenser tube temperature: (Tdefrost)

7.1.2 Foundamental functions

After power is on, no matter when compressor is started, the time span between the startups cannot be less than 3 minutes.

7.1.2.1 COOL mode

7.1.2.1.1 Cooling condition

If $T_{amb} \geq T_{set}+1℃$, COOL mode will act, compressor and outdoor fan will run, indoor fan will run at the set speed.

If $T_{amb} \leq T_{set}-1℃$, the unit will stop , compressor will stop and then outdoor fan will delay 15sec and stop.

If $T_{set}-1℃ < T_{amb} < T_{set}+1℃$, the unit will keep running in the old mode.

➢ In this mode, the reversal valve will not power on, the setting temp. range:16℃~30℃.

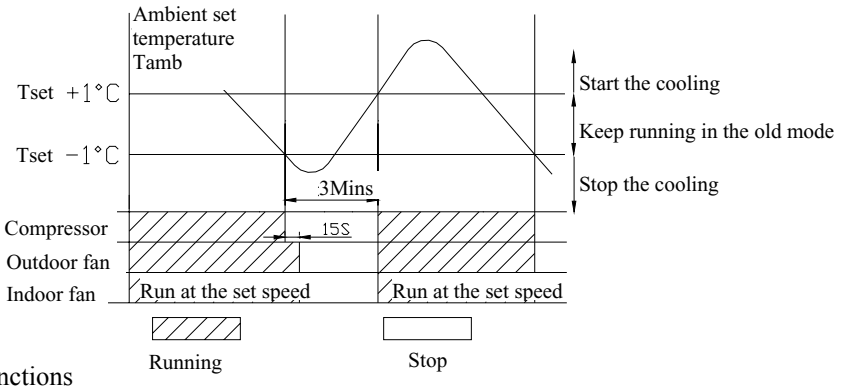

7.1.2.1.2 Protection Functions

- Overcurrent Portection

When the system current is tested higher than 13A, only fan will run. After 3 minutes, the whole unit will run in the old mode, if the overcurrent cannot be eliminated, the whole unit will stop, and can be restarted by the wireless remote control.

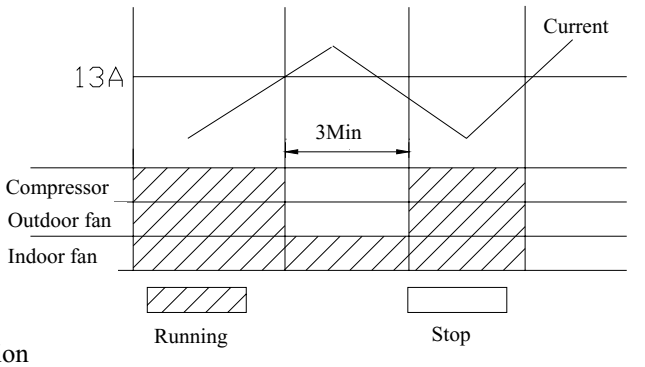

- Antifreezing Protection

When the system is tested, the compressor and outdoor fan will stop, indoor fan will run at the set speed; when the antifreezing protection is eliminated, and the compressor has stopped for 3min, the unit will return to the old mode.

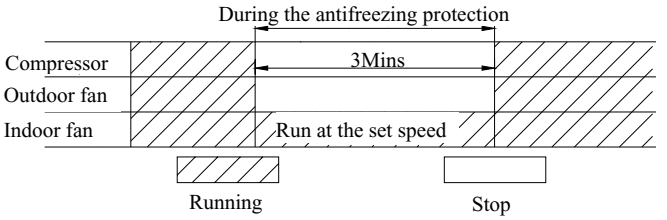

7.1.2.2 DRY Mode

7.1.2.2.1 The conditions and processes of dehumidifying:

If $T_{amb} > T_{set}+2°C$, the cooling mode will act, indoor fan speed could be adjusted, outdoor fan will run.

If $T_{set}-2°C \leq T_{room} \leq T_{set}+2°C$, DRY mode will act, the indoor fan will run at the low speed.after running for 6mins, outdoor fan and compressor will stop, but indoor fan will delay 30secs and stop, after 3.5mins, compressor and outdoor fan will run, and indoor fan will run at the low low speed. The processes of dehumidifying are shown as the above cycle.

If $T_{amb} < T_{set}-2°C$, the unit will stop, the compressor will stop, after 15sec latter, outdoor fan will stop, after another 15sec, indoor fan will stop.

- In this mode, the reversal valve will not power on, the setting temp. range:16°C~30°C.

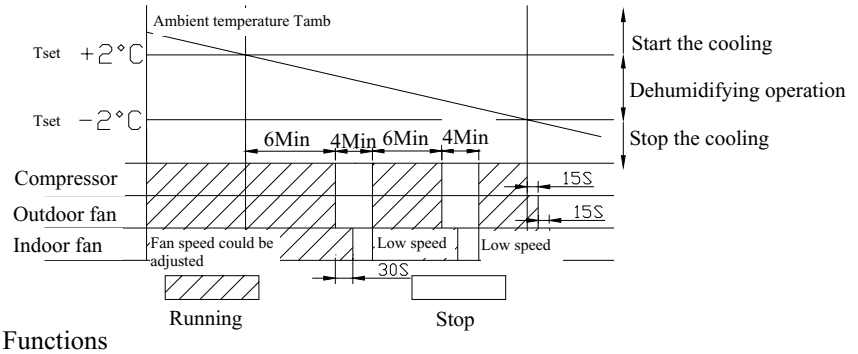

7.1.2.2.2 Protection Functions

◆ Antifreezing Protection

When running in COOL mode, antifreezing protection is the same as the cooling. The DRY mode act, when the antifreezing protection is detected, the compressor will stop, but outdoor fan will delay 15secs and stop, indoor fan will run at low speed; when antifreezing protection is eliminated and compressor has stopped for 3min, the whole unit will run at the original status.

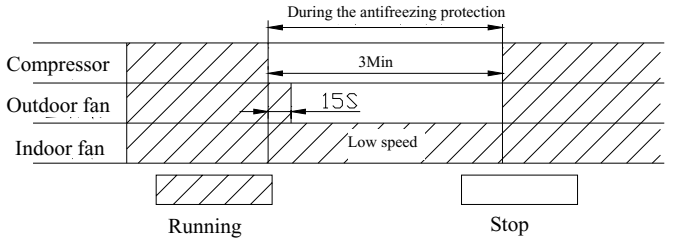

7.1.2.3 HEAT Mode

7.1.2.3.1 The conditions and processes of heating

If $T_{amb} \leq T_{set}+2°C$, HEAT mode will act, compressor, outdoor fan and reversing valve will run, but indoor fan will after 20sec delayed and run.

If $T_{amb} \geq T_{set}+4°C$, Compressor will stop first, outdoor fan will delay 15s and stop, reversing valve will keep working, after 30secs indoor fan will blow the surplus heat, after 30secs it will stop.

If $T_{set}+2°C < T_{set} < T_{set}+4°C$,the unit will keep running in the old mode.

- In this mode, the reversal valve will not power on, the setting temp. range:16°C~30°C.

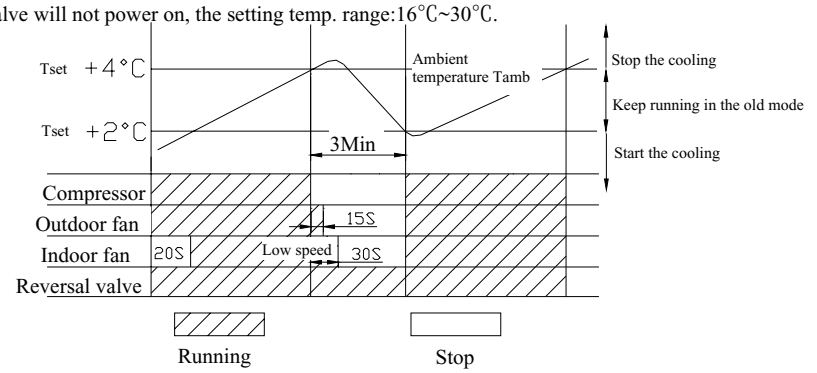

7.1.2.3.2 The conditions and processes of defrosting

When detecting there is frost on the condenser, system enter into defrosting state, 10sec later, indoor fan stops running, reversing valve delay 2sec and stop, out door fan delay another 2sec will stop, when detecting the defrosting has been finished or has frosted for 10min, outdoor fan and reversing valve are turned on, 20sec later, indoor fan will start to run, and start heat circulation.

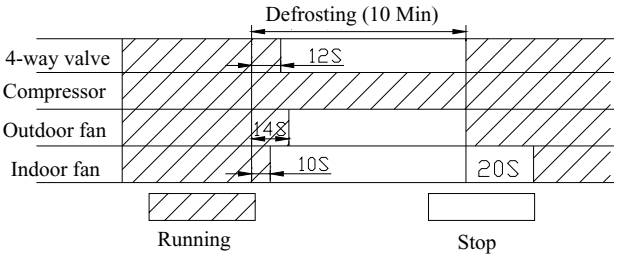

7.1.2.3.3 Protection function

◆ Overcurrent protection

When the system current is tested higher than 13A, the compressor, outdoor fan and indoor fan stop running; 3min later, whole unit will run in old mode, indoor fan will delay 20sec and start to run.

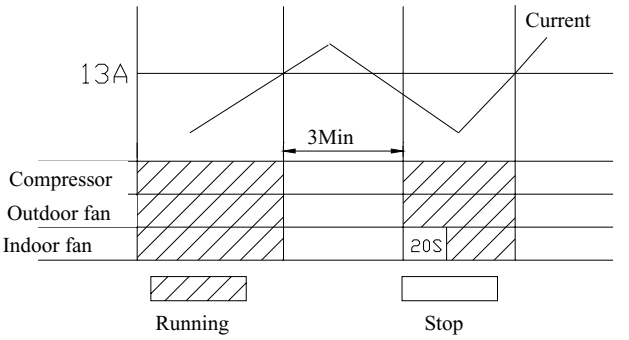

◆ Avoiding high temp.

In HEAT mode, when detecting Ttube is very high, outdoor fan will stop running; when detecting Ttube is normal, outdoor fan will return to run.

◆ Noise cancellation protection

When turning off the unit or exchanging the mode, the reversing valve will delay 2min to stop.

7.1.2.4 AUTO mode

According to the ambient temperature to select COOL or HEAT mode automatically. The protection function as HEAT/COOL mode

7.1.3 Other control

7.1.3.1 Swing motor

When it is powered on,the swing motor turn to position O, to turn off the air outlet vent; when the unit is turned on, turn to postion D, then return to position L; in swing state, the louver swings between position L and D. When the unit is turned off, will return to position O.

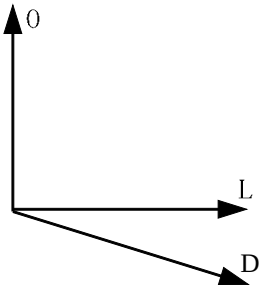

7.1.3.2 Buzzer

When PCB is power on or receives the signal from the wireless remote control, the buzzer will send out the sound once.

7.1.3.3 Run indicator

Run indicator, it will light when starting the unit and extinguish when defrosting.

7．1．3．4 Manual switch function (under indoor unit front panel)

7．1．3．4．1 Auto function

When setting the switch to "AUTO", it will run in AUTO mode. If receiving the signal, it will run according to the remote signal.

7．1．3．4．2 Test function

When setting the switch to "TEST", the unit will run in COOL mode, indoor fan will run at high speed, louver will run in SWING mode.

If receiving remote signal, the unit will run according to remote signal. If the sensor is open-circuited or short-circuited, buzzer will alarm.

7．1．3．4．3 Run function

When setting the switch to "RUN", the unit will run according to remote signal.

7．1．3．4．4 Stop function

When setting the switch to "STOP", the unit will stop running.

7．1．3．5 Sleep function

In COOL or DRY mode, when the set sleeping has run for 1 hour, Tset will rise 1℃; 2 hours later,Tset will rise 2℃. Indoor fan will run at low speed

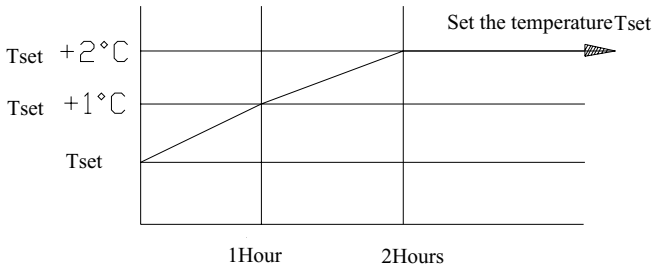

In HEAT mode, when the set sleeping has run for 1 hour, Tset will fall 1℃; 2 hours later, Tset will fall 2℃Indoor fan will run at low speed

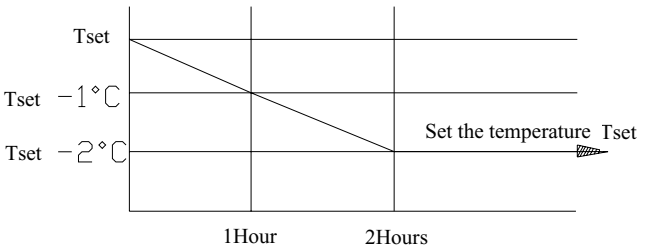

7．1．3．6 Auto FAN

In this mode, according to ambient temperature,indoor fan will select High, Middle, Low fan speed.

7．1．3．7 Timing Function

7．1．3．7．1 Time on

The unit is stopped when the timer for turning on acts. When it is time to turn on, the PCB will act in the set mode. The distance of setting twice is 0.5hour and time range is 0.5-24hours.

7．1．3．7．2 Time off

Set the timer for turning off function when the unit is turned on, when it is time to turn off, the unit will be switched off. The distance of setting twice is 0.5 hour and time range is 0.5-24hours.

7．1．3．8 Memory Function

The unit will restart in the old mode with memory function after power is turned off.

7.2 PCB function manual 2

GSW（7 × 2+12）-22L/A　KF-(32+18 × 2)GW/A12

7.2.1 Temperature parameter

- The room set temperature: (Tset)
- The room ambient temperature:(Tamb)

7.2.2 Foundamental functions

When it is powered on, at any cases, the twice interval of compressor's starting time should be no less than 3mins, the first time of starting,there is no 3mins delayed. Once the compressor started, according to indoor temperature changes it will not stop within 5mins.

7.2.2.1 COOL mode

7.2.2.1.1 Cooling condition

If $T_{amb} \geq T_{set}+1°C$, COOL mode will act, compressor and outdoor fan will run, indoor fan will run at the set speed.
If $T_{amb} \leq T_{set}-1°C$, the unit will stop, compressor will stop and then outdoor fan will delay 15sec and stop, indoor fan runs at set speed.
If $T_{set}-1°C < T_{amb} < T_{set}+1°C$, the unit will keep running in the old mode.

➢ In this mode, the reversal valve will not power on, the setting temp. range:16℃~30℃.

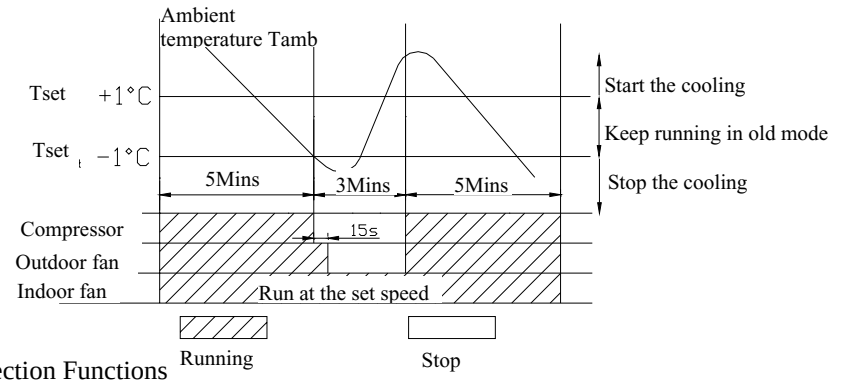

7.2.2.1.2 Protection Functions

- Overcurrent Portection

When the system current is tested higher than 13A, only fan will run. After 3 minutes, the whole unit will run in the old mode, if the overcurrent cannot be eliminated, the whole unit will stop, and can be restarted by the wireless remote control.

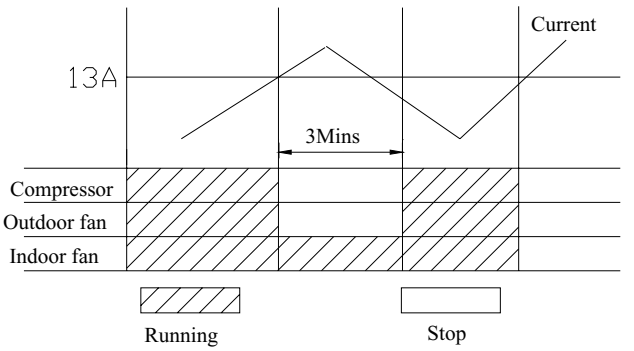

- Motor block-running protection

If detected PG motor hasn't feedback the signal outputting, the whole unit will stop, 3min delayed, the whole unit will keep original running If has continously detected 3 times of motor block-running, the whole unit will stop and cannot return to original operation.

- Antifreezing Protection

When the system is tested, the compressor and outdoor fan will stop, indoor fan will run at the set speed; when the antifreezing protection is eliminated, and the compressor has stopped for 3min, the unit will return to the old mode.

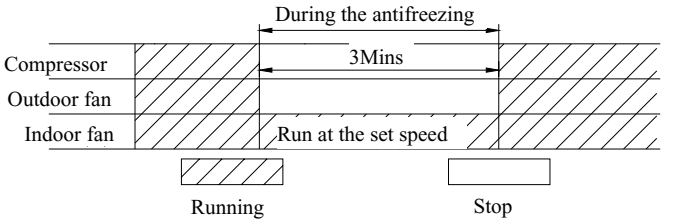

7.2.2.2 DRY Mode

7.2.2.2.1 The conditions and processes of dehumidifying:

If Tamb＞T set+2℃, the cooling mode will act, indoor fan will run at set speed.

If Tset-2℃≤Tamb≤Tset+2℃, DYR mode will act, indoor fan run at the low speed, after 6mins, compressor stops running, 15secs later, outdoor fan stop 30secs later, indoor fan will stop, 3.5mins later, compressor, outdoor fan will run, indoor fan runs at the low speed. The processes of dehumidifying are shown as the above cycle. Outdoor fan will run at low speed.

If Tamb＜Tset-2℃, compressor, indoor fan, outdoor fan will stop running.

➢ In this mode, the reversal valve will not power on, the setting temp. range:16℃~30℃.

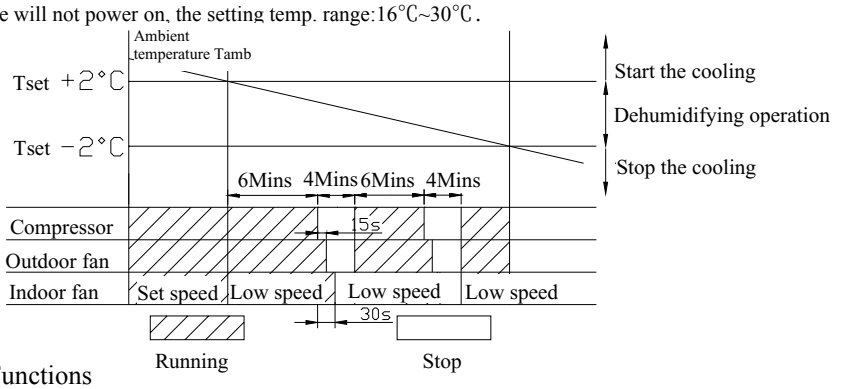

7.2.2.2.2 Protection Functions

◆ Antifreezing Protection

When running in COOL, DRY mode, antifreezing protection is the same as the cooling, when entering into DRY running (6 times on,4 times off), compressor running 6mins and detecting antifreezing protection, compresor, outdoor fan stop running, indoor fan runs at low speed; when the antifreezing eliminated and stopped for 3mins whole unit will keep running in the old mode.

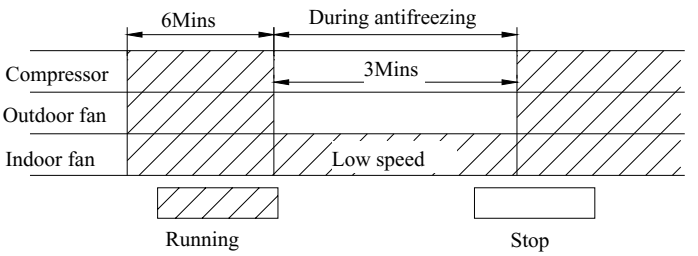

◆ Overcurrent protection

In this mode, the overcurrent protection as the COOL mode.

7.2.2.3 HEAT Mode

7.2.2.3.1 The conditions and processes of heating

If Tamb ≤Tset+2℃, HEAT mode will act, compressor, outdoor fan and reversing valve will run, but indoor fan will after 2Mins delayed and run.

If Tamb≥Tset+4℃, Compressor will stop first, outdoor fan will delay 15s and stop, reversing valve will keep working, after 90secs indoor fan will blow the surplus heat and will stop running.

If Tset+2℃＜T set＜T set +4℃,the unit will keep running in the old mode.

➢ In this mode, the reversal valve will power on, the setting temp. range:16℃~30℃.

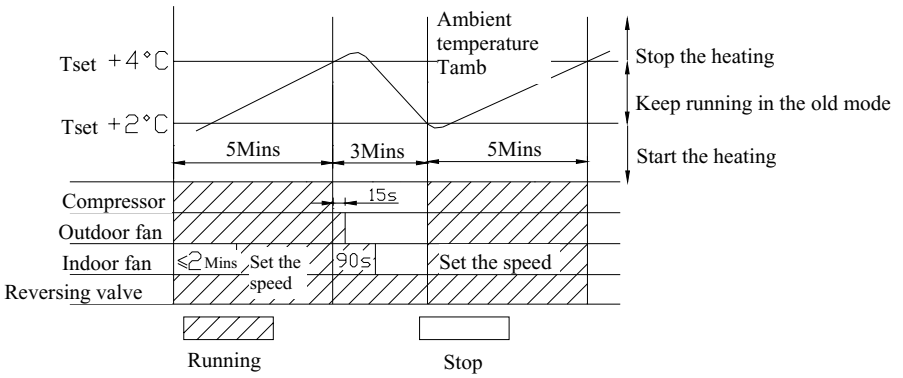

7.2.2.3.2 The conditions and processes of defrosting

When detecting there is frost on the condenser, system enter into defrosting state, 10sec later, indoor fan stops running, reversing valve delay 2sec and stop, outdoor fan delay another 2sec will stop, when detecting the defrosting has been finished or has frosted for 10min, outdoor fan and reversing valve are turned on, 2mins later, indoor fan will start to run at set speed.

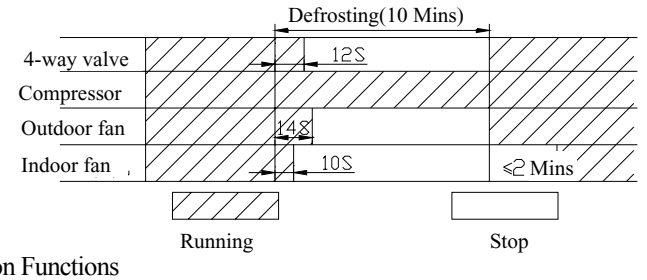

7.2.2.3.3 Protection Functions

◆ Overcurrent Portection

The overcurrent protection is the same as the COOL mode..

◆ Avoiding high temp.

In heat mode, if continuously detected Ttube is very high, the outdoor fan will stop running, when Ttube has restored to a normal state, the outdoor fan will return back to run.

◆ Noise cancellation protection

When use "Running/Stop running" to turn off the unit, the reversing valve will delay 2min to stop.

◆ Motor block-running protection

Motor block-running protection is the same as COOL mode.

7.2.2.4AUTO mode

In this mode, according to ambient temp. to select COOL or HEAT mode automatically, except there is no at least 5mins delay of compressor protection, the protection function is the same as COOL, HEAT mode.

7.2.3 Other control

7.2.3.1 Swing motor

When it is powered on,the swing motor turn to position O, to turn off the air outlet vent; when the unit is turned on, turn to postion D, then return to position L; in swing state, the louver swings between position L and D. When the unit is turned off, will return to position O.

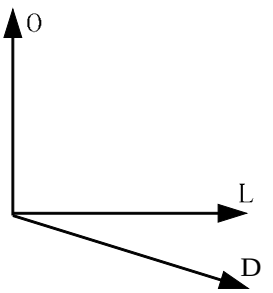

7.2.3.2 Buzzer

When PCB is power on or receives the signal from the wireless remote control, the buzzer will send out the sound once.

7.2.3.3 Run Indicator

Running indicator, it will light when starting, it will flash when defrosting.

7.2.3.4 Functions of manual switch (under indoor unit front panel)

7.2.3.4.1 Auto function

When setting the switch to "AUTO", it will run in AUTO mode. If receiving the signal, it will run according to the remote signal.

7.2.3.4.2 Test function

When setting the switch to "TEST", the unit will run in COOL mode, indoor fan will run at hight speed, louver will run in SWING mode. If receiving remote signal, the unit will run according to remote signal. If the sensor is open-circuited or short-circuited, buzzer will alarm.

7.2.3.4.3 Run function

When setting the switch to "RUN", the unit will run according to remote signal.

7.2.3.4.4 Stop running function

When setting the switch to "STOP", the unit will stop running.

7.2.3.5 Sleep function

In COOL or DRY mode, when the set sleeping has run for 1 hour, Tset will rise 1℃; 2 hours later,Tset will rise 2℃. Indoor fan will run at low speed

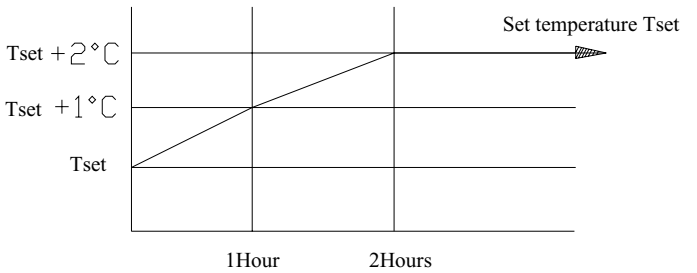

In HEAT mode, when the set sleeping has run for 1 hour, Tset will fall 1℃; 2 hours later, Tset will fall 2℃. Indoor fan will run at low speed

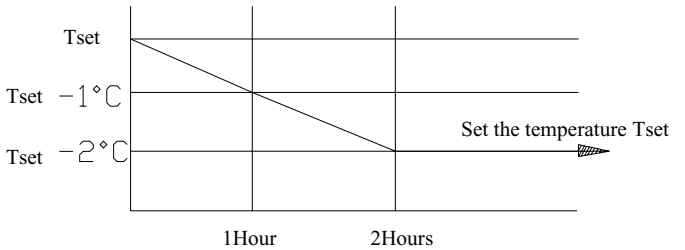

7.2.3.6 Auto FAN

In this mode, according to ambient temperature,indoor fan will select High, Middle, Low fan speed.

7. 3 Operation methods of wireless remote control 1

7. 3. 1 Names and functions of wireless remote control

Note:

- Be sure that there are no obstructions between receiver and wireless remote control.
- The wireless remote control could receive the signal within 10 meters.
- Don't drop or throw the wireless remote control.
- Don't directly put the wireless remote control under the sunlight

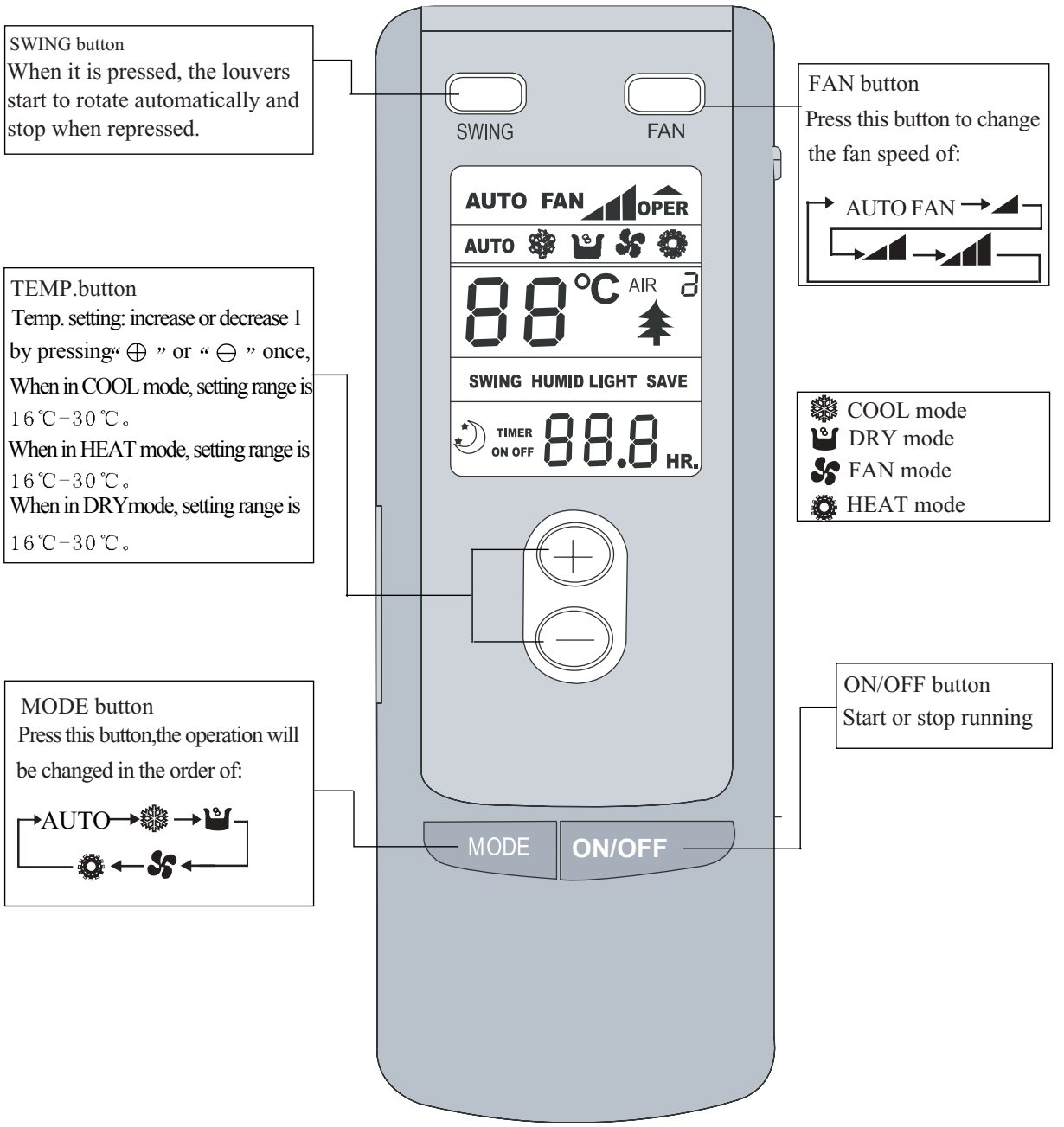

7. 3. 2 Names and functions of wireless remote control(Remove the cover)

Note:This type of wireless remote control is a kind of new current control.
Some buttons of the control which are not available to this air conditioner will not be described below.

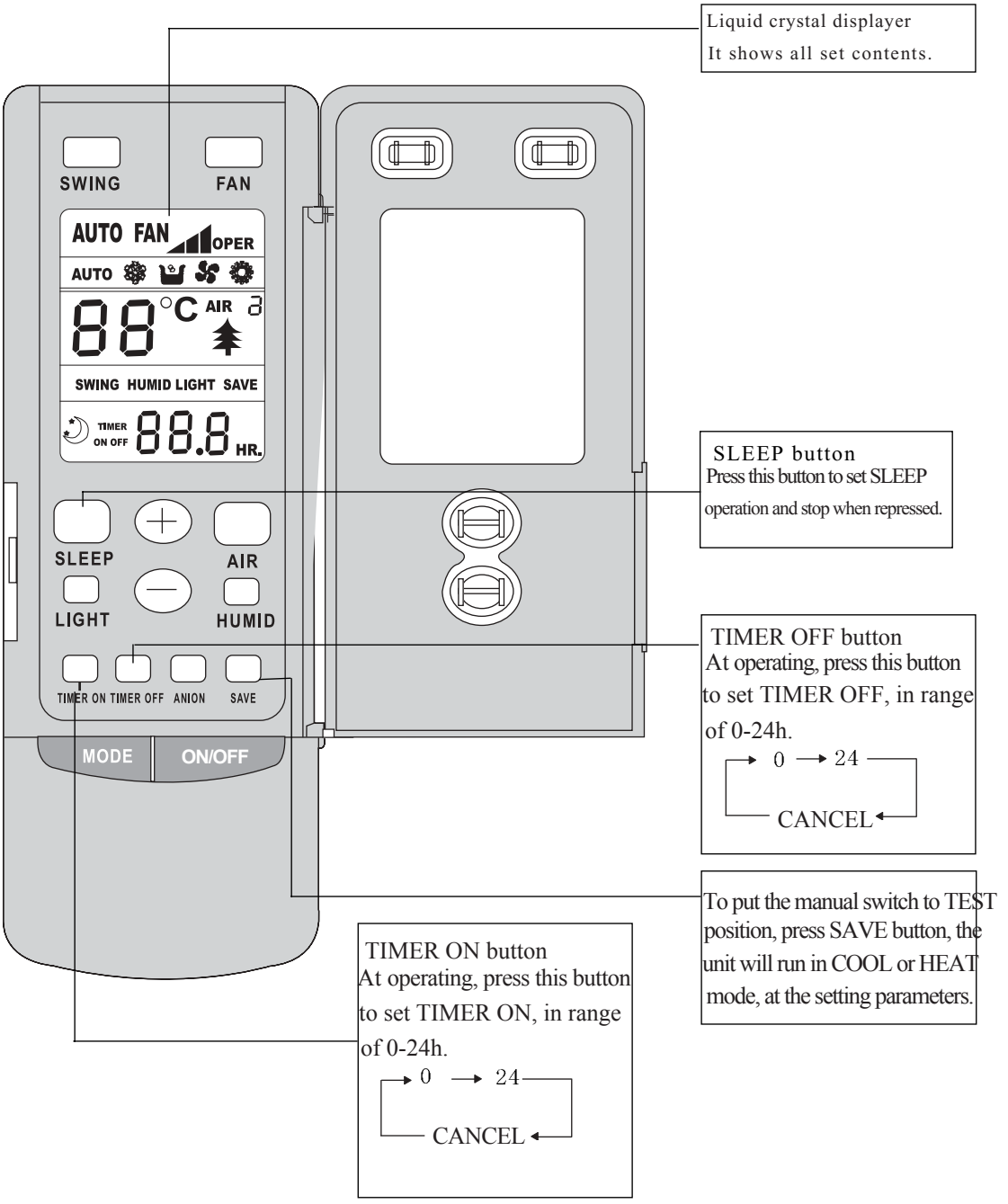

7. 3. 3 COOL mode operation

According to indoor temp. and setting temp., microcomputer of wireless remote control could automatically judge to start running or not, If indoor temp. is higher than setting temp., compressor will run in COOL mode. If indoor temp. is lower than setting temp., compressor will stop running, only the indoor unit run.

The range of indoor temp. setting in COOL mode: 16℃-30℃.

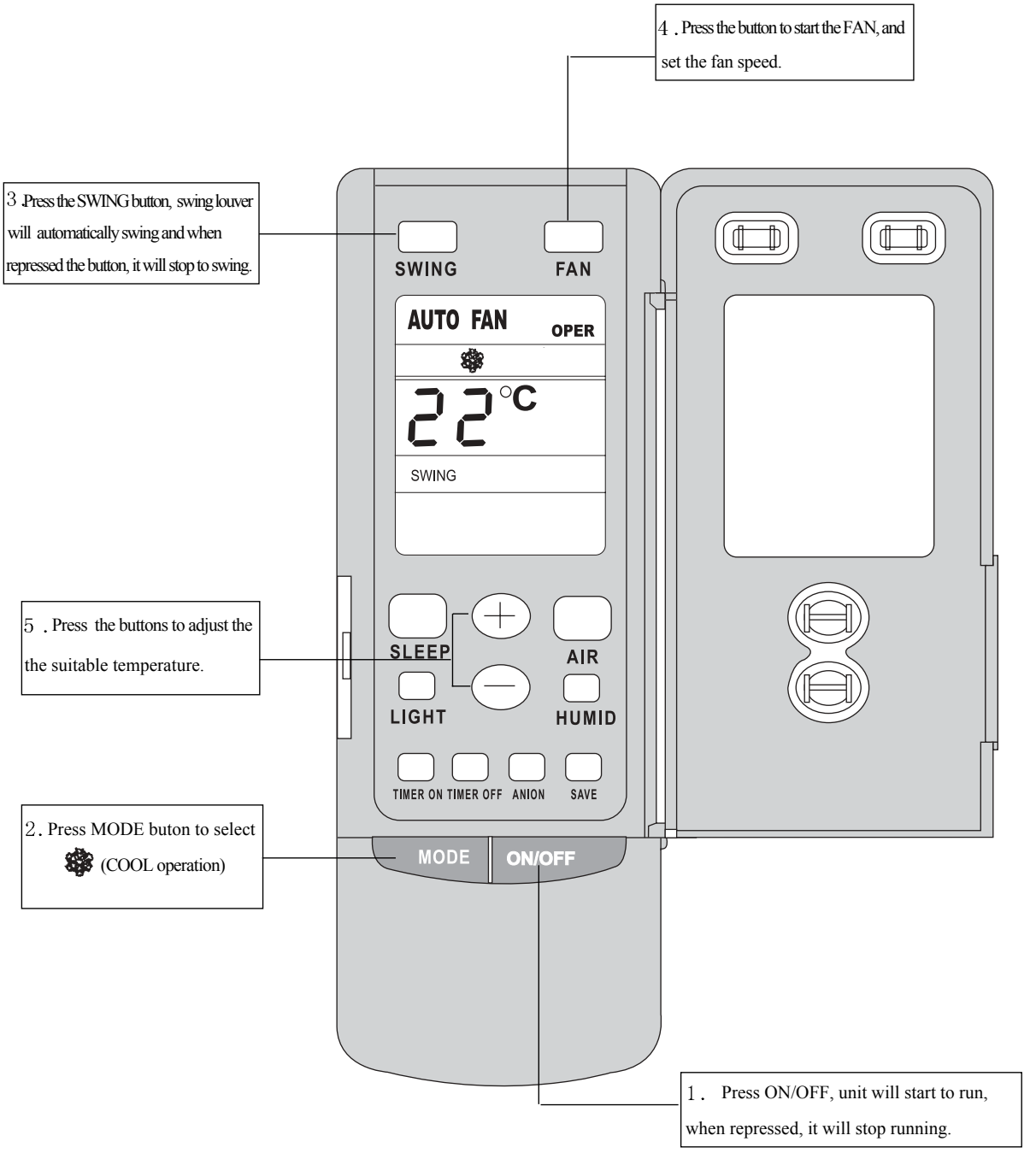

7. 3. 4 DRY mode operation

If indoor temp. is lower than setting temp., compressor, outdoor fan will stop running. If indoor temp. depart from setting temp. ±2℃, the unit will run in DRY mode. If indoor temp. higher than setting temp., unit will run in COOL mode. The range of indoor temp. setting in DRY mode: 16℃-30℃.

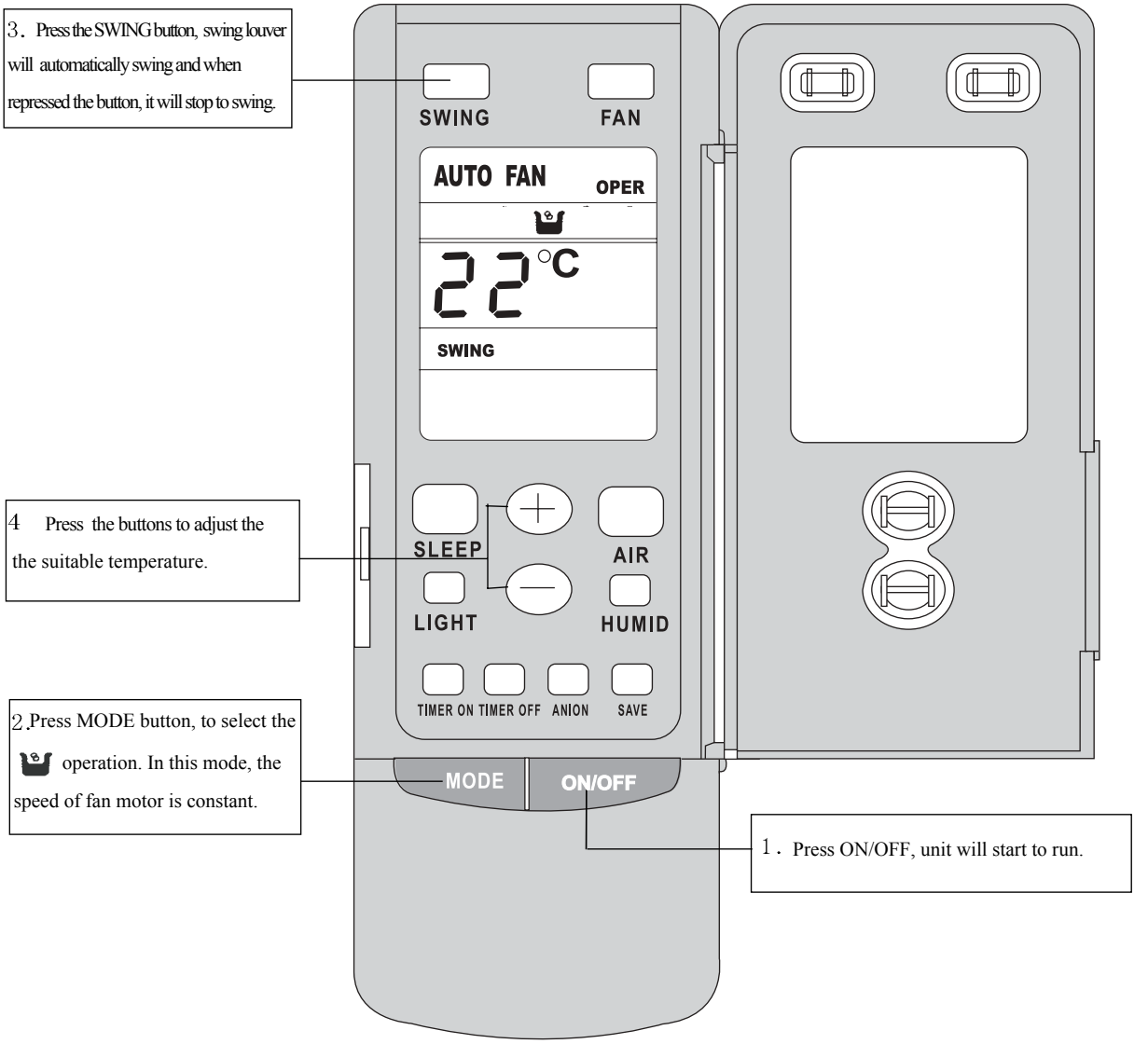

7. 3. 5 AUTO mode operation

In AUTO mode, the setting temp. range of COOL mode is 25℃.

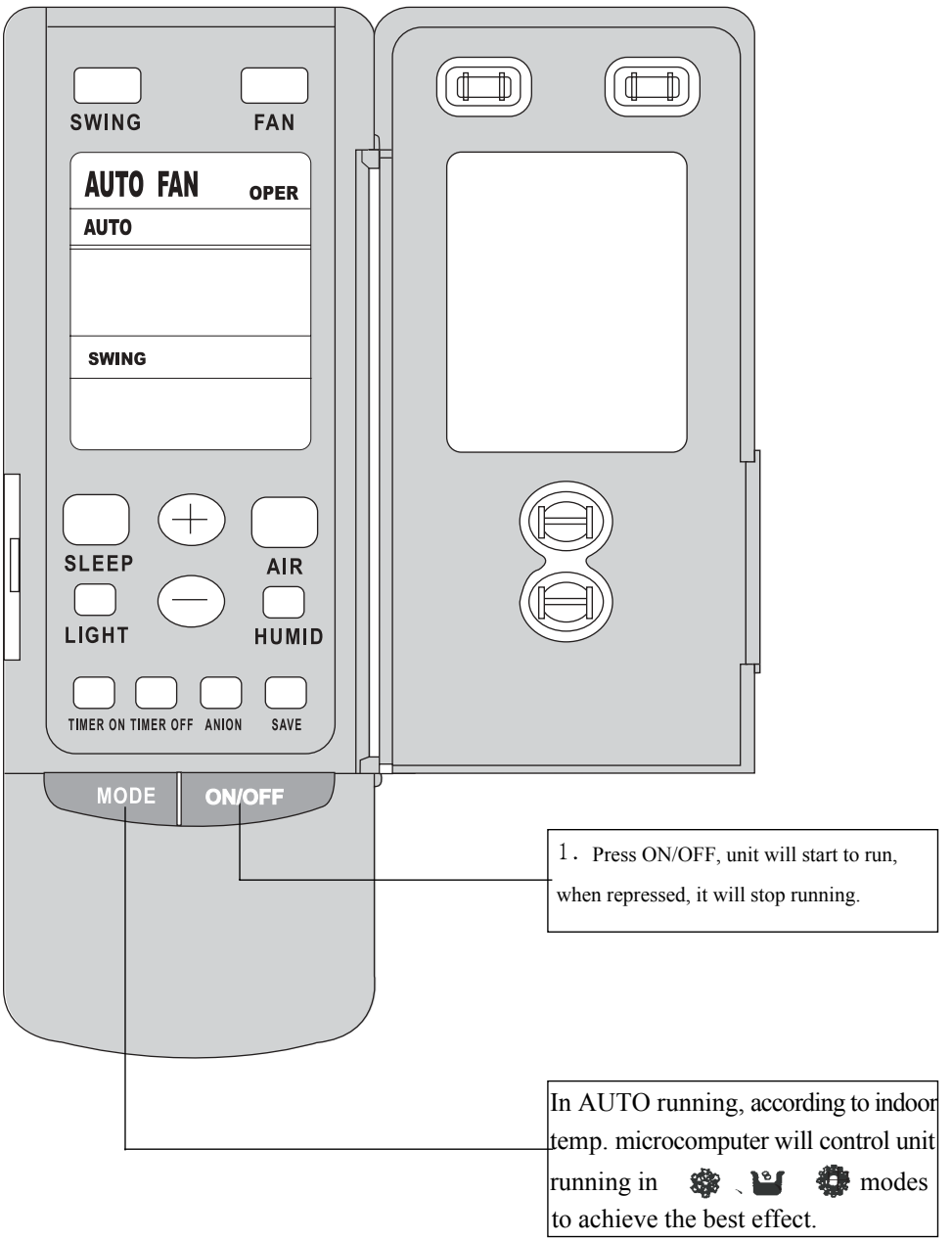

7. 3. 6 TIMER operation mode

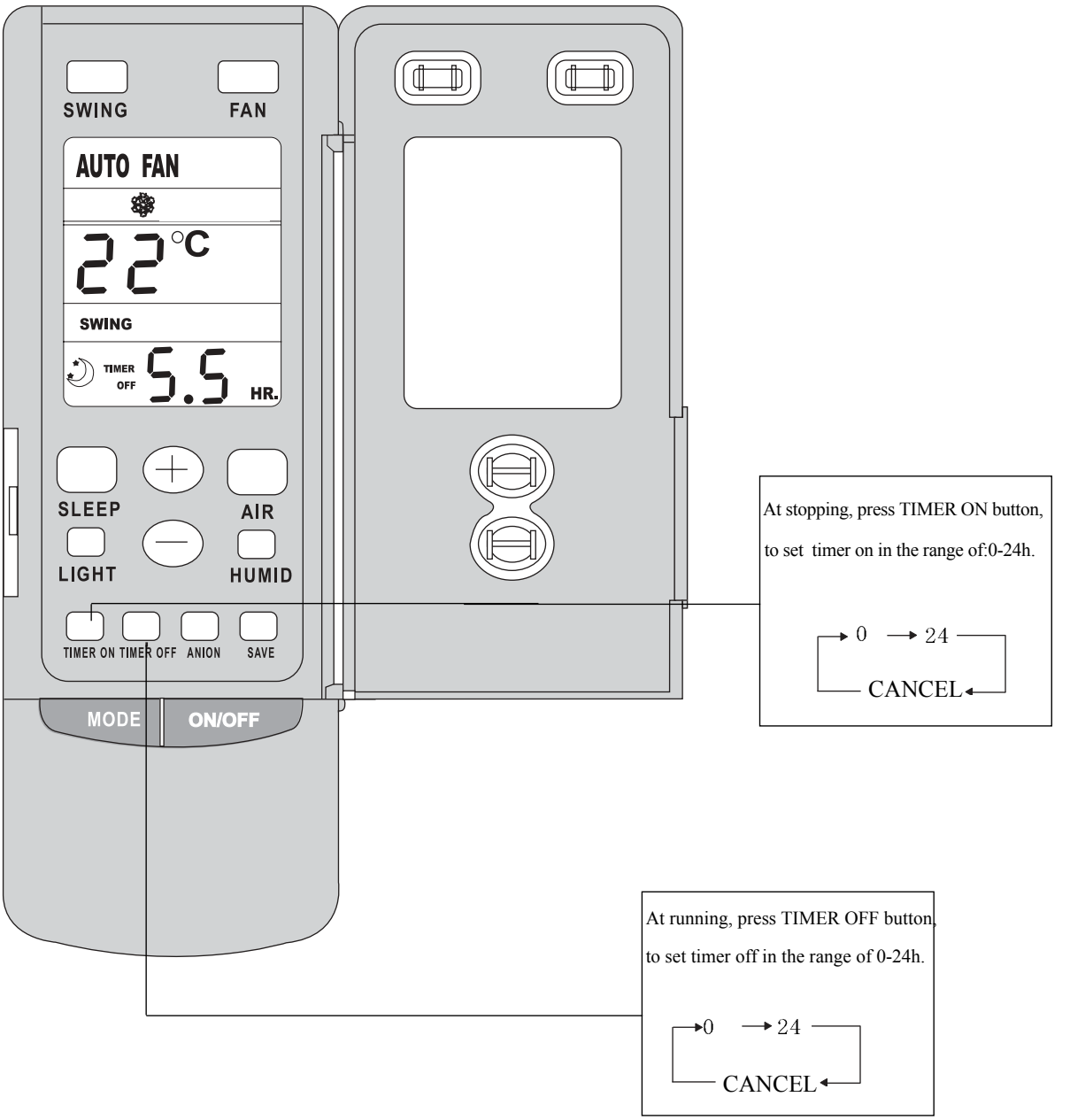

7. 3. 7 SLEEP mode operation

In COOL or DRY mode, if set the unit in SLEEP operation, the set temp. will be increased 1°C in 1h, and increased 2°C in 2h. Indoor fan motor runs in low speed.

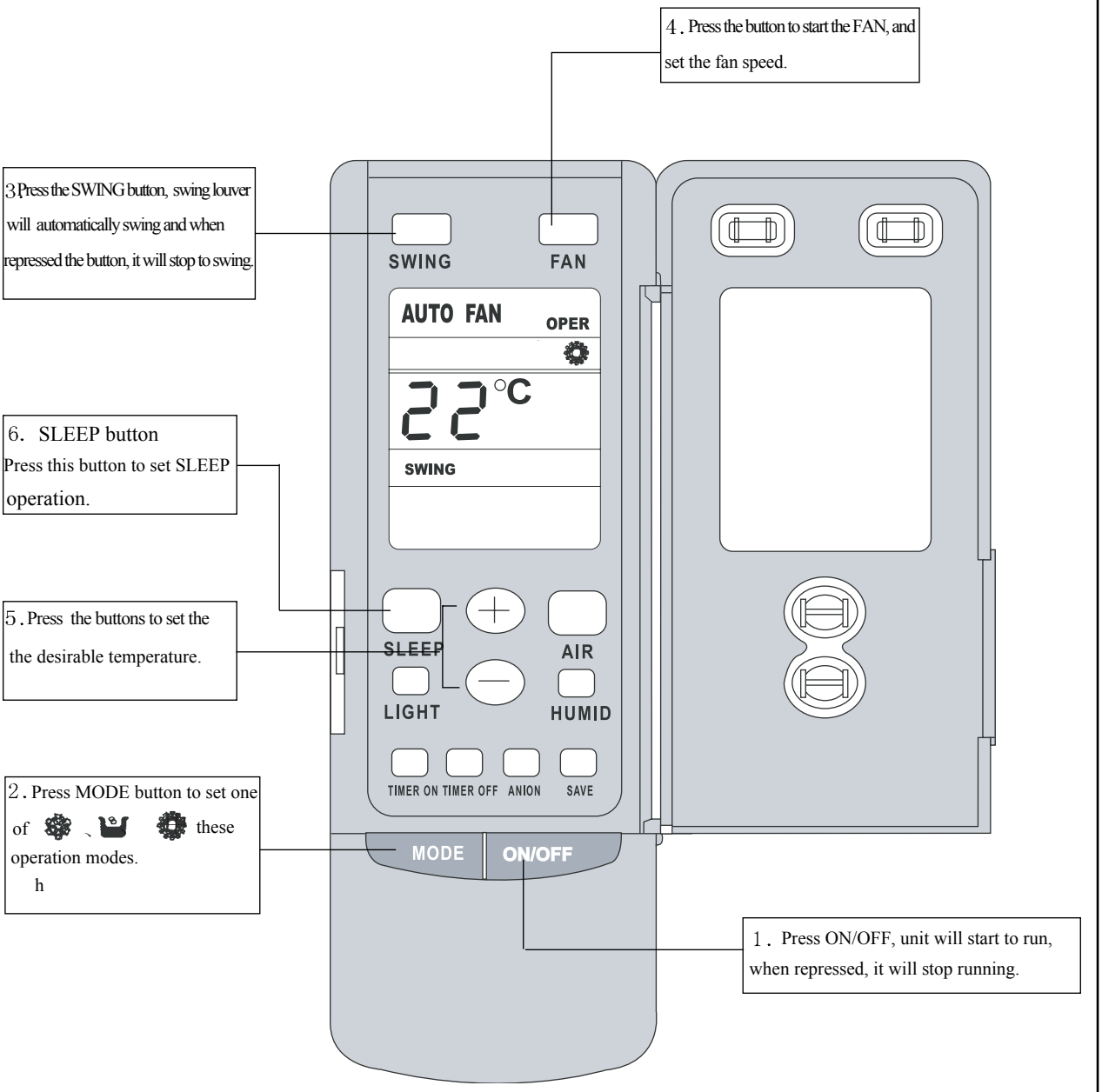

7. 3. 8 Inserting batteries

1. Remove the cover from the back.
2. Insert two batteries(two 7# dry-cell batteries.)
3. Re-attach the cover.

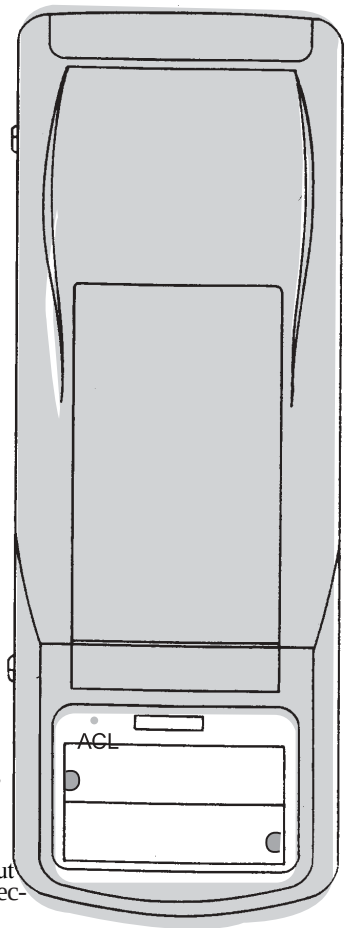

2. Insert two 7# batteries

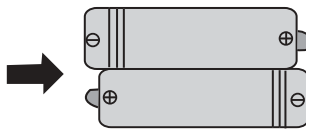

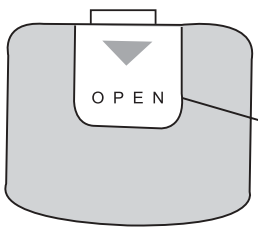

1. Remove the cover
3. Re-attach the cover

NOTE:

- Don't mix new and used or different types of two batteries to insert.
- Remove batteries away when wireless remote control is not in use.
- The lifespan of the batteries is about 1year.
- The remote controller should be placed about 1m or more away from the TV or any other electric appliances.
- Bad batteries are forbidden.
- The remote control signal can be received at the distance of up to about 10m.

8 Dissassembly Procedures

8.1 Disassembly procedures for indoor unit

Operation procedures/pictures

8.1.1 Remove the front case

Open the front panel, along the slots which is fixing the front panel to pull it out, and then could take out the front panel.(As shown in Fig.8-1)

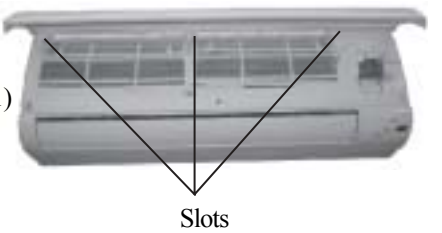

Fig. 8-1

8.1.2 Remove the filter

To push the clasps of filters out of the slots, then to take the filter out . (As shown in Fig.8-2)

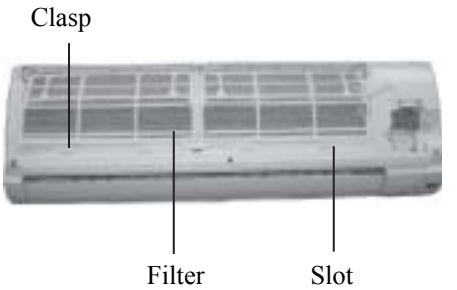

Fig. 8-2

8.1.3 Disassemble guide louver

To push the guide louver from the clasp, then could take it off from the swing motor's couplated place and left side's couplated place. (As shown in Fig.8-3)

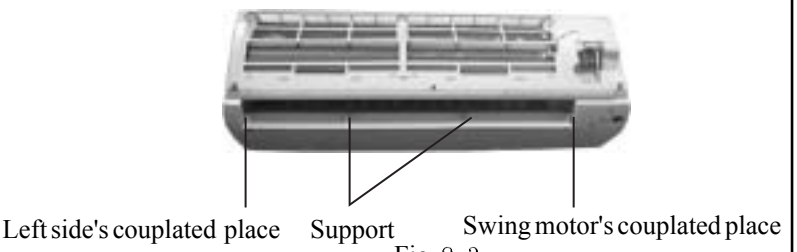

Fig. 8-3

8.1.4 Disassemble the front case

Open 3pcs screw cover, srew off 3pcs tapping screw, then to push inside the clasp of the front case back by screw driver, and to push the bolt which is used to clasp the front panel by hands, then could disassemble the front case. (As shown in 8-4, 8-5)

Fig. 8-4

Fig. 8-5

8.1.5 Disassemble water-tray

To push the clasps of both sides of water-tray outside, thereinto, the right side's clasp is in the water-tray inside, to pull it out forcibly at it's position.(As shown in 8-6, 8-7)

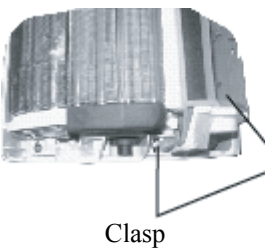

Fig. 8-6

Fig. 8-7

8.1.6 Disassemble electric box cover

To screw off 2pcs crew, to take off the LED holder (As shown in Fig.8-8)

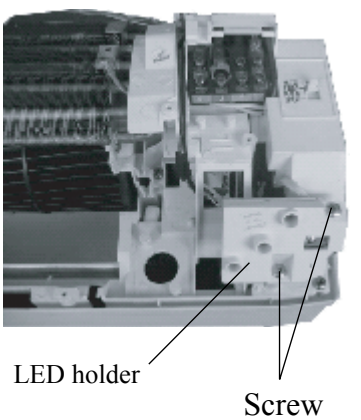

Fig. 8-8

Operation procedures/pictures

To press 4pcs clasp of electric box cover, then could take off the electric box cover. (As shown in Fig. 8-9)

Fig. 8-9

8.1.7 Disassemble electric box

To screw off 3pcs screw and 1pc earthing screw as shown in the following Fig., at the same time to push up the clasp which is clasped on the rear case then could take the electric box .(As shown in 8-9, 8-11)

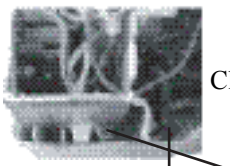

Fig. 8-10

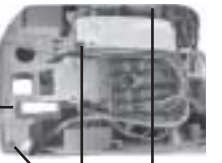

Fig.8-11

8.1.8 Disassemble evaporator

At the back of rear case, to screw off the tapping screw of rear clamp to take off the rear plamp.(As shown in Fig.8-12)

Fig. 8-12

To screw off 2pcs screw of motor clamp and 1pc screw which is fixed on the other side of rear case, then could take off the evaporator, pay more attention to connection pipe and fin, do not broken the fins or hurt yourself.

(As shown in Fig.8-13, 8-14.)

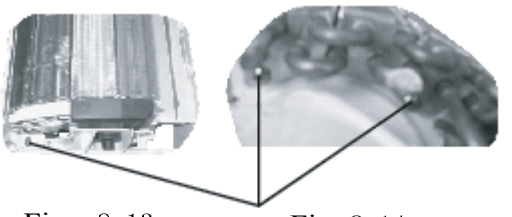

Fig . 8-13 Fig. 8-14

8.1.9 Disassemble motor

To screw off 2pcs screw of motor clamp with scrw drive, and to push the clasp of fig., and take off motor clamp.

(As shown in Fig.8-15)

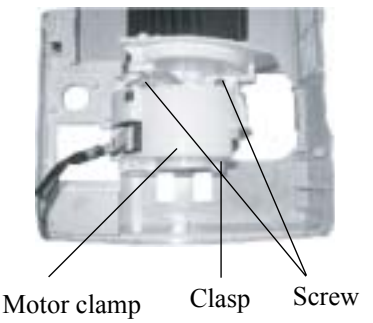

Fig. 8-15

Then to screw off the fixing screw which fixes the motor, then hang it and could take off the motor.(As shown in 8-16)

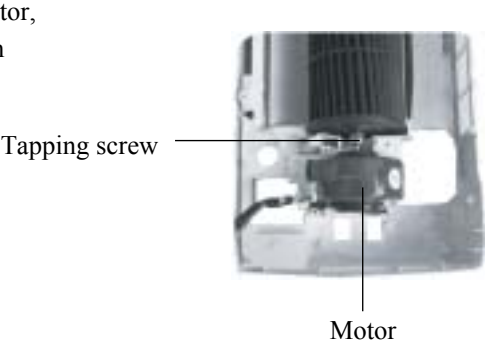

Fig. 8-16

8.1.10 Take out the cross flow fan

After taking out the motor, in the left side of fan blade, to take out of the fan of bearing.(As shown in 8-17)

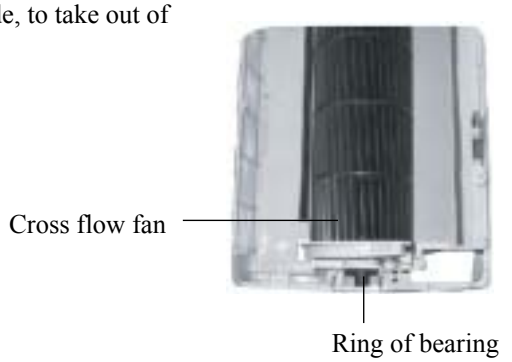

Fig. 8-17

8.2 Disassembly procedures for outdoor unit

Operation procedures/pictures

8.2.1 Disassemble front side plate

Screw off 4pcs fixing screw of front side plate, to hold the handle and pull it upward.(As shown in Fig. 8-18)

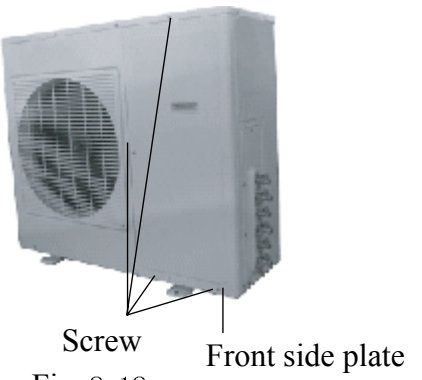

Fig. 8-18

8.2.2 Disassemble the top cover

Screw off the screws which fix the top cover around, take off the top cover(As shown in Fig.8-19)

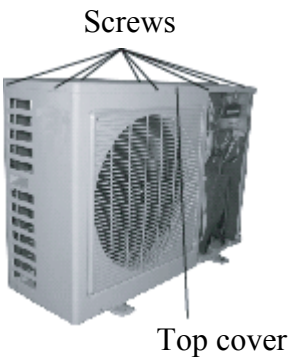

Fig. 8-19

8.2.3 Dissassemble the rear grill

Screw off the rear grill and 4pcs tapping screw on cabinet, then could disassemble the rear grill. (As shown in Fig.8-20.)

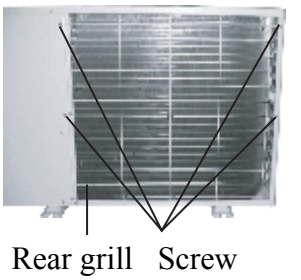

Fig. 8-20

8. 2. 4 Disassemble the cabinet

Screw off 8pcs tapping screw of cabinet, chassis and side plate of condenser, then could disassemble the cabinet. (As shown in Fig. 8-21)

Fig. 8-21

8. 2. 5 Disassemble the electric box

To take out 2pcs bolt which is installed on electric mounting board, and pull out of the compressor and inserting slice which is led out by fan motor adn motor, take out of the electric mounting board.(As shown in Fig.8-22)

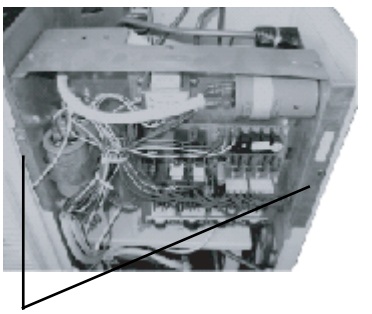

Fig. 8-22

8. 2. 6 Disassemble rear side plate

To screw off the screws of rear side plate, valve support and chasis(12pcs in all), to lift it upward could take out the rear side plate, fit for model GSW(9x3)-22L/a (As shown in Fig.8-23)

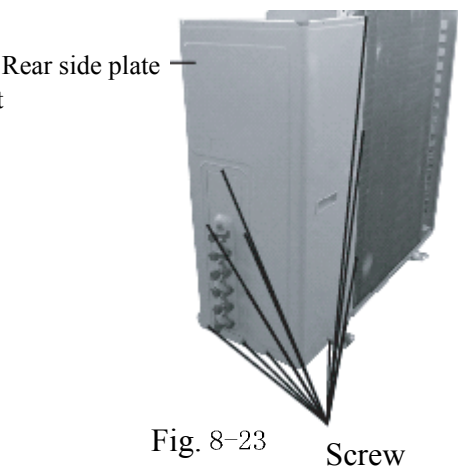

Fig. 8-23

Operation procedures/pictures

To screw off the screws of rear side plate and valve support,the screws of chassis and electromagnetic valve support(totally 13pcs), lift it up, then could disassemble the rear side plate, fit for KF-(32+18X2)GW/A12, KF-(32+18X2)GW/NA12 GSW(7x2+12)-22L/A. (As shown in Fig.8-24,8-25)

Fig. 8-24

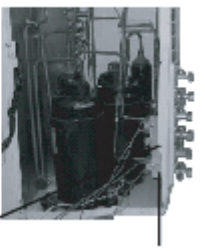

Fig. 8-25

8. 2. 7 Disassemble axial flow fan

To screw off the orbicular bolt which fixes the axial flow fan by spanner, and take out the fixed washer, and pull out the axial flow fan. (As shown in Fig.8-26)

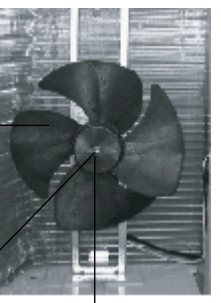

Fig. 8-26

8. 2. 8 Disassemble motor and motor support

To screw off the fixed screw which fixing the motor support, then to pull out the motor. To screw off the tapping screw which fixing the motor support, lift it up, and take out the motor support.(As shown in Fig.8-27)

S

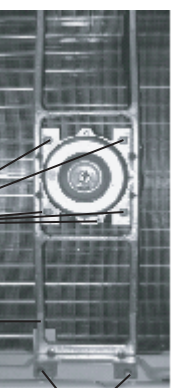

Fig. 8-27

8.2.9 Disassemble capillary

To wrap the capillaries with wet gauze, and unsolder the solder points those connect the capillary and other pipelines. The solder course should be as quickly as posible,and make sure that the gauze should keep wet, pay attention not to burn out the lead wires of compressor (NOTE: Before welding the capillaries, make sure to discharge the refrigerant of the system first.)

KF-(32+18X2)GW/A12, KF(32+18X2)GW/NA12,
GSW(7X2+12)-22L/A fit for Fig.-28
GSW(9X3)-22L/A fit for Fig.-29

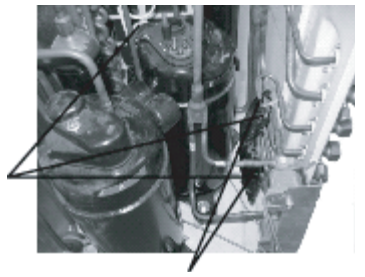

Fig. 8-28

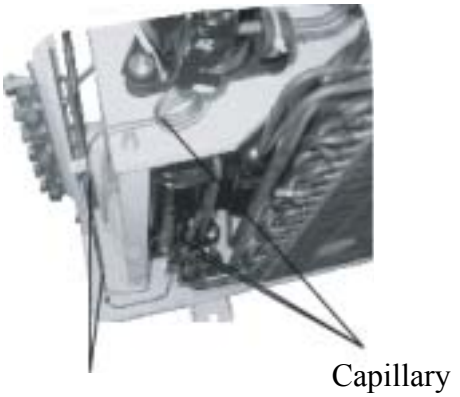

Fig. 8-29

8.2.10 Disassemble valves

To screw off 2pcs bolt of each gas valve, un solder the solder joints of air return pipe and take off the gas valve.(NOTE:when unsoldered the solder joints, should fully wrap the gas valve with gauze, avoid valves are damaged by the high temp.) To screw off 2pcs bolts of liquid valve , and unsolder the solder joints of liquid valve and Y-type pipe, take out the liquid valve. (As shown in Fig.8-30)

Fig. 8-30

8.2.11 Disassemble compressor

To loose 3pcs nut with washer in the lower of two compressors chassis,(NOTE:At first, should discharge refrigerant.)to unsolder the solder joint of air in and air out pipes, to remove pipe lines carefully, take out the compressor.
Fit for KF-(32+18X2)GW/A12,
KF (32+18X2)GW/NA12,
GSW (7X2+12)-22L/A.(As shown in Fig.8-31)

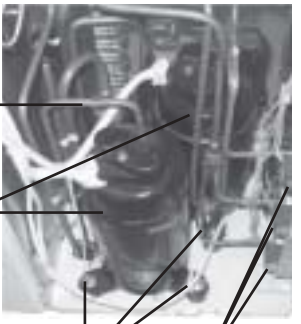

Fig. 8-31

To loose 3pcs nut with washer in the upper of compressor chassis,(NOTE: Should discharge refrigerant at first.) to unsolder the solder joints of air in and air out pipes, to remove pipelines carefully, take out the compressor.
GSW(9x3)-22L/A (As shown in Fig.8-32)

Fig. 8-32

Then use spanner to scrw off 6pcs of upper chassis take out the lower chassis.
Fit for GSW(9x3)-22L/A(As shown in Fig.8-33).

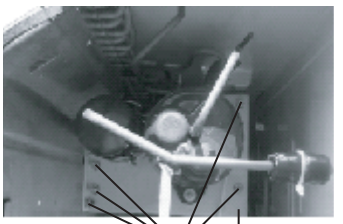

Fig. 8-33

At last, to screw off the bolts in the lower of two compressors chassis, unsolder the solder joints of air in, air out pipes, to remove the pipelines carefully, take out the compressor.
Fit for GSW(9x3)-22L/A(As shown in Fig.8-34).

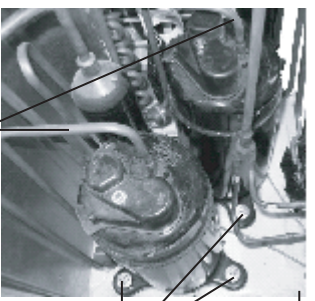

Fig. 8-34

9 Explosive view and spare parts list

9.1 Explosive view of indoor unit

Models: GSW(9x3)-22L/A

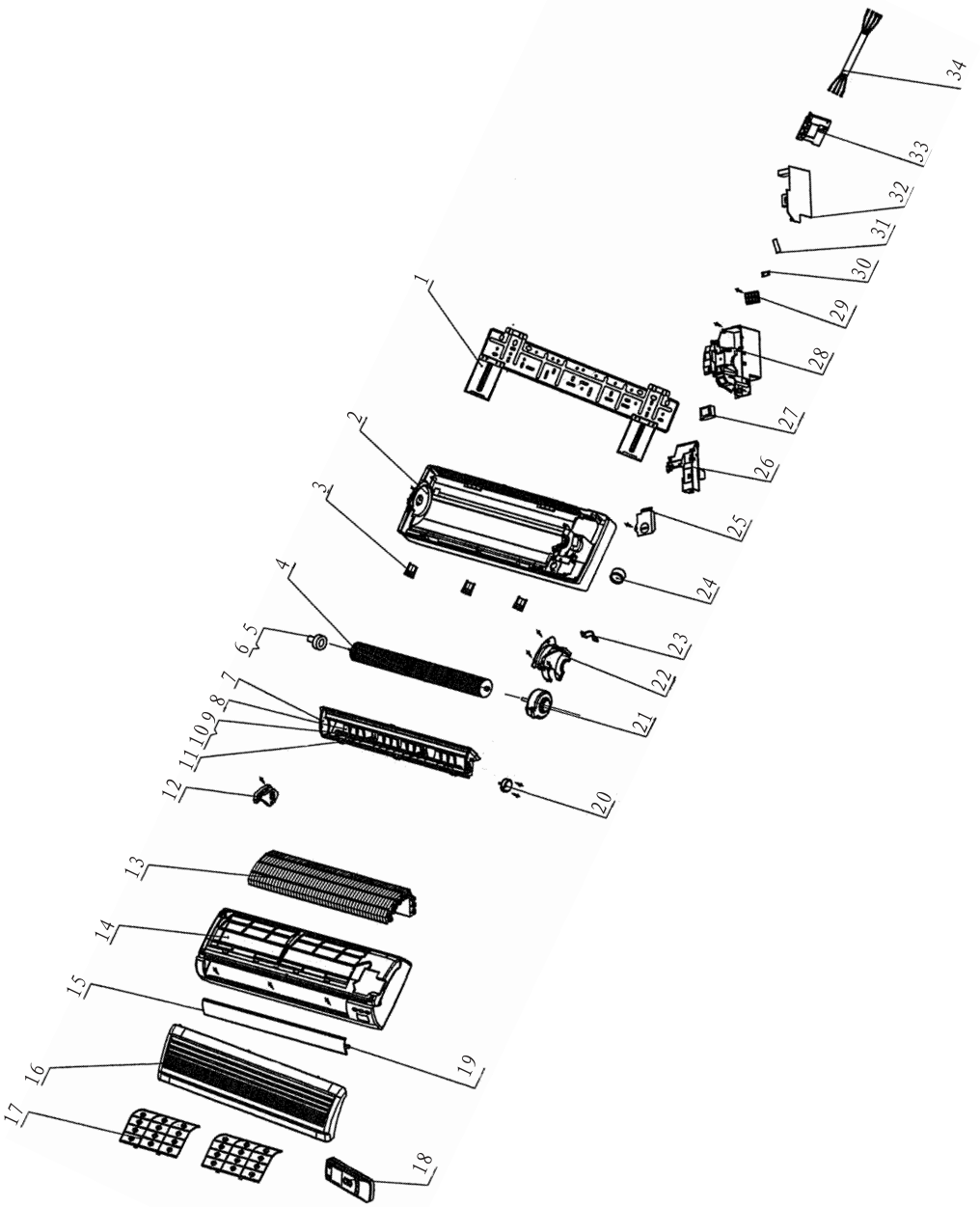

Models: KF-(32+18x2)GW/A12 KF-(32+18x2)GW/NA12 GSW(7x2+12)-22L/A

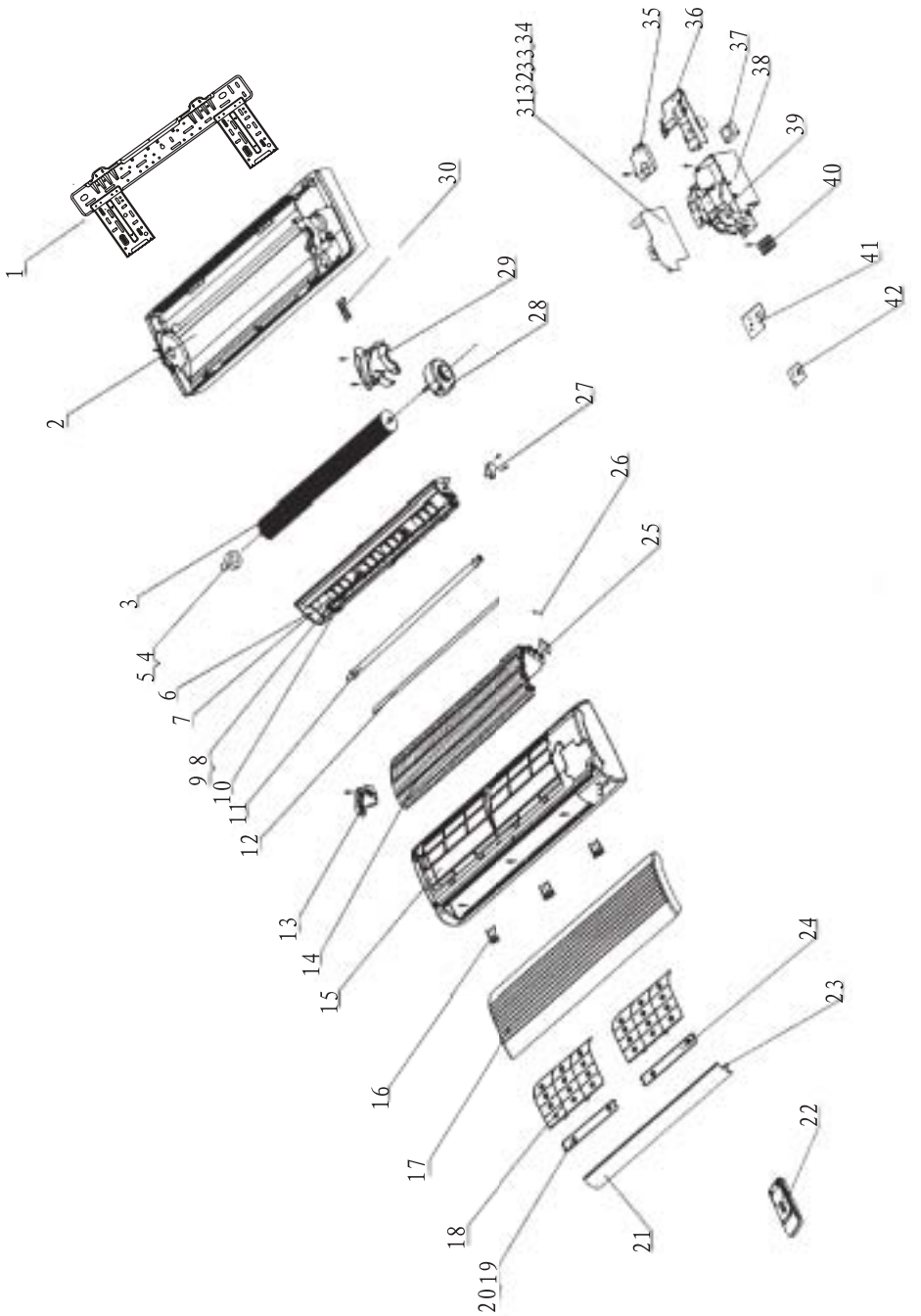

9.2 Spare parts list of indoor unit

No	Description	Part No.	Qty
		GSW(9X3)-22/A(I)	
1	Wall mounting frame	01252220	1
2	Rear case assy	75112047	1
3	Screw cover	24252001	3
4	Crossflowfan	10352001	1
5	Fan bearing	76512210	1
6	Ring of cross flow fan bearing	76512203	1
7	Watertray	20182001	1
8	Swing louver	10512002	12
9	Swing connecting rod 1	10582002	1
10	Swing connecting rod 2	11582003	1
11	Manual lever	10582001	2
12	Evaporator supporter	24212016	1
13	Evaporator assy	01002015	1
14	Front panel	20002608	1
15	Guide louver	10512001	1
16	Front panel	20002001	1
17	Filter	11122002	2
18	Wireless remote control Y512F	30512506	1
19	Guide louver bearing	10542011	3
20	Stepping motor MP24GA	15212102	1
21	Motor FN13A	15012108	1
22	Motor clamp A	26112023	1
23	Cable groove	70482001	1
24	Magnetic ring	49010104	1
25	Top cover of electric box2	01412007	1
26	Top cover of electric box1	20102084	1
27	Power transformer	43110170	1
28	Electric box	20102001	1
29	Terminal board	42010184	1
30	Wire clip	70482401	1
31	Receiving board	30046034	1
32	Main board	300557211	1
33	Board of indicator light	22432001	1

No.	Description	Part No.		Qty
		KF-(32+18X2)G/A12(18)	KF-(32+18X2)G/A12(32)	
1	Wall mounting frame	01252220	01252220	1
2	Rear case assy	22202001	22202001	1
3	Crossflowfan	10352001	10352001	1
4	Fan bearing	76512210	76512210	1
5	Ring of bearing	76512203	76512203	1
6	Water tray assy	20182012	20182012	1
7	Swing louver	10512002	10512002	12
8	Swing connecting rod 1	10582002	10582002	1
9	Swing connecting rod2	10582003	10582003	1
10	Manual lever	10582001	10582001	2
11	Drainage pipe	05232411	05232411	1
12	Evaporator gate	26112022	26112022	1
13	Evaporator supporter	24212016	24212016	1
14	Evaporator assy	01002015	01002015	1
15	Front case assy	200020182	200020182	1
16	Screw cover	24252001	24252001	3
17	Front panel	20002001	20002001	1
18	Filter	11122002	11122002	2
19	Air cleaner holder	24222001	24222001	2
20	Air cleaner screen	11012002	11012002	1
21	Guide louver	10512001	10512001	1
22	Wireless remote control Y512	30512506	30512506	1
23	Guide louver bearing	10542011	10542011	3
24	Air cleaner screen B	11012003	11012003	1
25	Evaporator pipe cover	06122001	06122001	1
26	Sensor insert B	42020063	42020063	1
27	Stepping motor MP24GA	15212102	15212102	1
28	Motor FN13A	\	15014003	1
	Motor FN14A	15012108	\	1
29	Motor clamp	26112023	26112023	1
30	Connecting pipe clamp	24242001	24242001	1
31	Mainboard 5C51F0A	30055212	30055208	1
	PCB 5C51C0A	\	30025113	1
32	Indoor tube sensor	39000116	39000116	1
33	Indoor room sensor	39000043	39000043	1
34	Fuse 3.15A/250VAC	46010014	46010014	1
35	Top cover of electric box2	01412007	01412007	1
36	Top cover of electric box1	20102084	20102084	1
37	Power transformer SC28B1	43110170	43110170	1
38	Electric box A	20102001	20102001	1
39	Cable groove	70482001	70482001	1
40	Terminal board GT4B3A	42011233	42011233	1
41	LED holder	24212005	24212005	1
42	Receiving board ID	J30046019	30046019	1
43	Power connecting cable	40020413	40020413	1

No.	Description	Part No.		Qty.
		KF-(32+18X2)G/NA12(18)	KF-(32+18X2)G/NA12(32)	
1	Wall mounting frame	01252220	01252220	1
2	Rear case	22202001	22202001	1
3	Crossflowfan	10352001	10352001	1
4	Fan bearing	76512210	76512210	1
5	Ring of bearing	76512203	76512203	1
6	Water tray assy	20182012	20182012	1
7	Swing louver	10512002	10512002	12
8	Swing connecting rod 1	10582002	10582002	1
9	Swing connecting rod 2	10582003	10582003	1
10	Manual lever	10582001	10582001	2
11	Water drainage pipe	05232411	05232411	1
12	Evaporator gate	26112022	26112022	1
13	Evaporator supporter	24212016	24212016	1
14	Evaporator assy	01002015	01002015	1
15	Front case assy	20002018	20002018	1
16	Screw cover	24252001	24252001	3
17	Front panel	20002001	20002001	1
18	Filter	11122002	11122002	2
19	Air cleaner holder	24222001	24222001	2
20	Air cleaner screen A	11012002	11012002	1
21	Guide louver	10512001	10512001	1
22	Wireless remote control Y512	30512506	30512506	1
23	Guide louver bearing	10542011	10542011	3
24	Air cleaner screen B	11012003	11012003	1
25	Evaporator pipe cover	06122001	06122001	1
26	Sensor insert B	42020063	42020063	1
27	Stepping motor Mp 24GA	15212102	15212102	1
28	Motor FN9E	15012054	15012054	1
29	Motor clamp	26112023	26112023	1
30	Connecting pipe clamp	24242001	24242001	1
31	PCB5K512J	30025569	300255691	1
32	Indoor tube sensor	390000594	390000594	1
33	Indoor room sensor	390000453	390000453	1
34	Fuse3.15A/250VAC	46010014	46010014	1
35	Top cover of electric box 2	01412007	01412007	1
36	Top cover of electric box 1	20102084	20102114	1
37	Transformer SC28B1	43110170	43110170	1
38	Electric box A	20102001	20102001	1
39	Cable groove	70482001	70482001	1
40	Terminal board GT4B3A	42011233	42011233	1
41	LED holder	24212005	24212005	1
42	Receiving board JD	30046034	30046034	1
43	Power connecting cable	40020413	40020413	1

No.	Description	Part No.		Qty.
		GSW(7X2+12)-22L/A(I7)	GSW(7X2+12)-22L/A(I12)	
1	Wall mounting frame	01252220	01252220	1
2	Rear case	22202001	22202001	1
3	Crossflowfan	10352001	10352001	1
4	Fan bearing	76512210	76512210	1
5	Ring of bearing	76512203	76512203	1
6	Water tray assy	20182012	20182012	1
7	Swing louver	10512002	10512002	12
8	Swing connecting rod 1	10582002	10582002	1
9	Swing connecting rod 2	10582003	10582003	1
10	Manual lever	10582001	10582001	2
11	Water drainage pipe	05232411	05232411	1
12	Evaporator gate	26112022	26112022	1
13	Evaporator supporter	24212016	24212016	1
14	Evaporator assy	01002015	01002015	1
15	Front case assy	20002108	20002108	1
16	Screw cover	24252001	24252001	3
17	Front panel	20002001	20002001	1
18	Filter	11122002	11122002	2
19	Air cleaner holder	24222001	24222001	2
20	Air cleaner screen A	11012002	11012002	1
21	Guide louver	10512001	10512001	1
22	Wireless remote control Y512	30512506	30512506	1
23	Guide louver bearing	10542011	10542011	3
24	Air cleaner screen B	11012003	11012003	1
25	Evaporator pipe cover	06122001	06122001	1
26	Sensor insert B	42020063	42020063	1
27	Stepping motor Mp 24GA	15212102	15212102	1
28	Motor FN20B-PG	15012035	15012035	1
29	Motor clamp	26112023	26112023	1
30	Connecting pipe clamp	24242001	24242001	1
31	PCB 5C51-0A	30025133	30025133	1
32	Indoor tube sensor	39000116	39000116	1
33	Indoor room sensor	39000143	39000143	1
34	Fuse 3.15A/250VAC	46010014	46010014	1
35	Top cover of electric box 2	01412007	01412007	1
36	Top cover of electric box1	20102114	20102114	1
37	Transformer SC28B1	43110170	43110170	1
38	Electric box A	20102001	20102001	1
39	Cable groove	70482001	70482001	1
40	Terminal board GT4B3A	42011233	42011233	1
41	LED holder	24212005	24212005	1
42	Receiving board JD	30046019	30046019	1
43	Power connecting cable	40020413	40020413	1

9.3 Explosive view of outdoor unit

Models: GSW(9x3)-22L/A

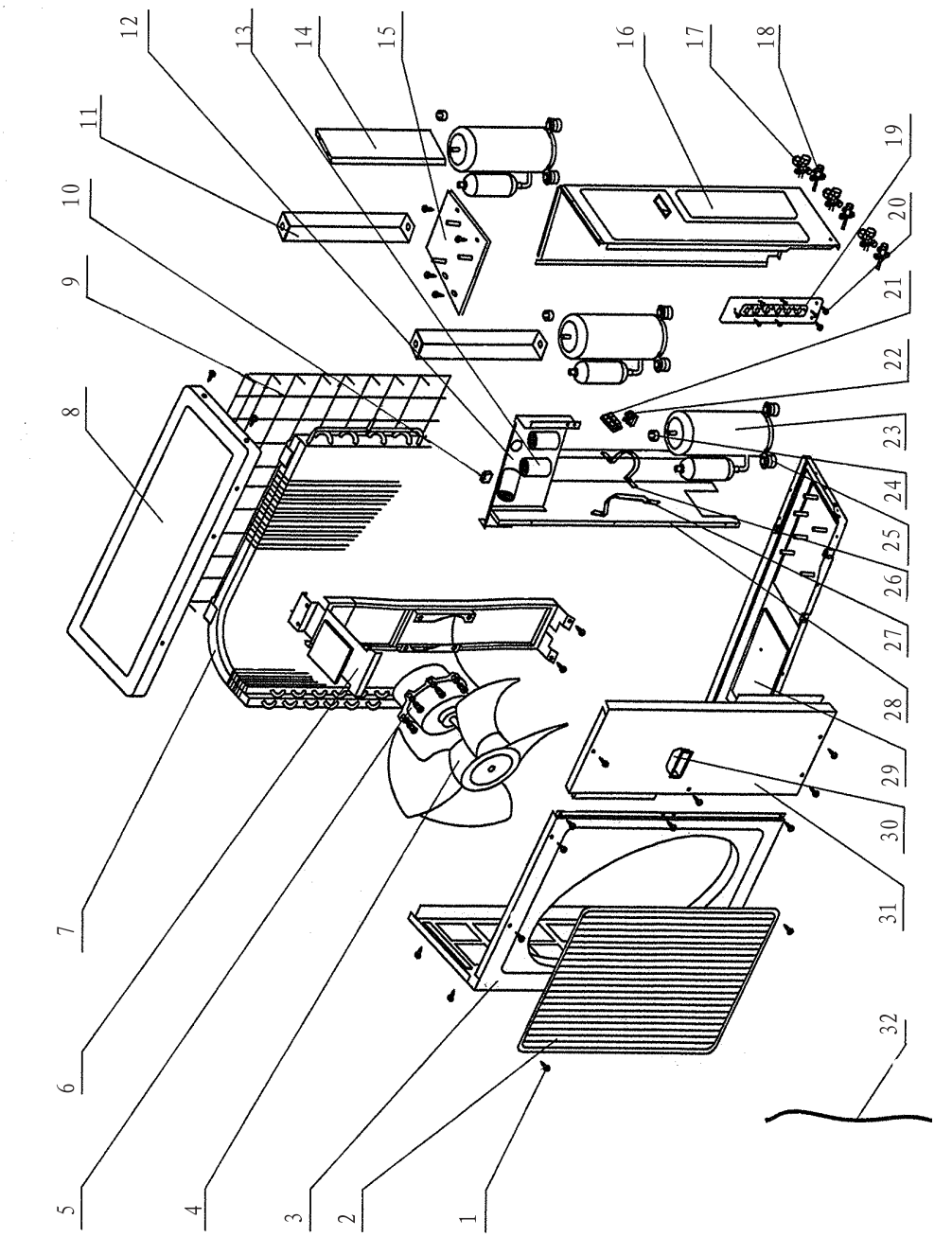

Models: KF-(32+18x2)GW/A12 KF-(32+18x2)GW/NA12 GSW(7x2+12)-22L/A

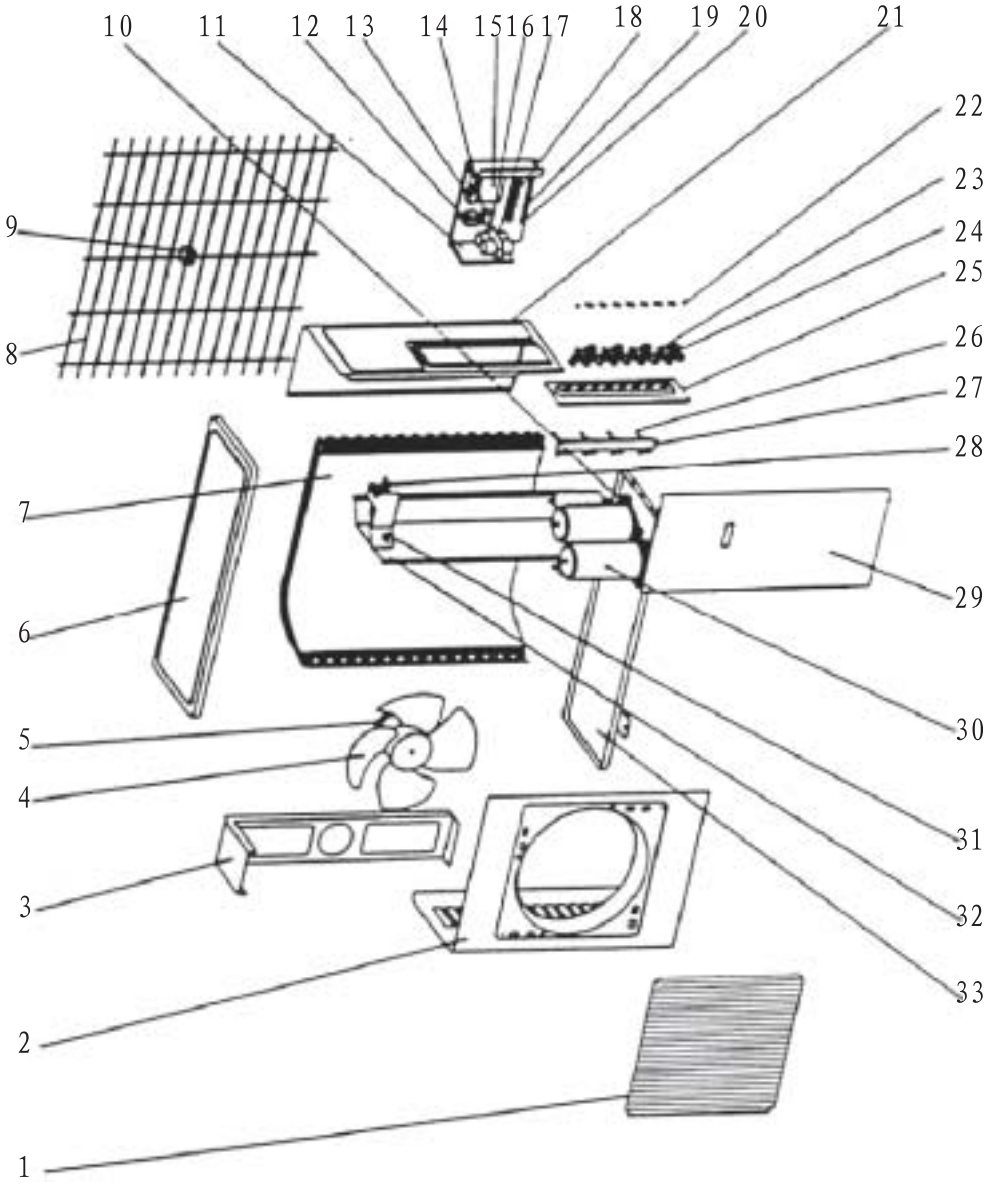

9.4 parts list of outdoor unit

No.	Description	Part No.			Qty.
		KF-(32+18X2)W/NA12	GSW(7X2+12)-22L/A(O)	KF-(32+18X2)W/A12	
1	Front grill	22265251	22265251	22265251	1
2	Cabinet	01435254	01435254	01435254	1
3	Motor support	01705253	01705253	01705253	1
4	Axial flow fan	10335253	10335253	10335253	1
5	Motor FW60L	15013063	\	\	1
	Motor FW68A	\	15015421	\	1
	Motor FW60B	\	\	15015205	1
6	Top cover	01255262	01255262	01255262	1
7	Condenser	01133010	01133012	01133012	1
8	Rear grill	01475252	01475252	01475252	1
9	Underlay of rear grill	76315252	76315251	76315251	1
10	Compressor bolt	70210054	70211014	70210054	6
11	Electric box sub-assy	014034025	014034023	014034024	1
12	Transformer SC28B1	43110170	43110170	43110170	1
13	Terminal board 2-8	42011103	42011103	42011103	3
14	Capacitor CBB61 3uF/450V	33010027	33010010	33010027	1
15	Mainboard KQ001	3055001	3055001	3055001	1
16	Capacitor clamp	02143013	02143013	02143013	1
17	Capacitor CBB65 25uF/450V	33000017	\	\	2
	Capacitor CBB65 30uF/450V	\	33000018	33000018	2
18	Terminal board RS9413	42011104	42011104	42011104	3
	Terminal board RS9413G	42010178	42010178	42010178	1
19	Capacitor clamp	\	0214013	\	1
20	Insulation gasket	70413432	70413432	70413432	1
21	Rear side plate	01303007	01303007	01303007	1
22	Tapping screw	\	70140160	70140165	16
		70140165	\	\	12
23	Valve 1/4"	07100131	07100017	07100017	3
		\	\	\	4
24	Valve 3/8"	\	\	\	4
		07100132	07100018	07100018	3
25	Valve support	01713044	01713044	01713044	1
26	Solenoid valve NEV-202DXF	43000062	43000062	43000062	1
27	Solenoid valve support 1	01713034	07143034	01713034	1
28	Solenoid valve VF10100	43000057	43000057	43000057	2
29	Front side plate	01305247	01305247	01305247	1
30	Compressor 2PS192F2AA02	\	00100283	\	2
	Compressor C-RV222H1AA	\	\	00100340	2
	Compressor C-RV237H01AA	00100353	\	\	2
31	Solenoid valve support 2	01723009	01723009	01723009	1
32	Isolation sheet sub-assy	01235253	01235253	01235253	1
33	Chassis sub-assy	01203304	01203346	01203304	1

S

No.	Description	Part No.	Qty.
		GSW(9x3)-22l/A(O)	
1	Tapping screw	70140561	23
2	Front grill	22265251	1
3	Cabinet	01435254	1
4	Axial flow fan	10335253	1
5	Motor (LW68A)	15015421	1
6	Motor support	01705253	1
7	Condensor assy	01103393	1
8	Top cover	01255262	1
9	Rear grill	01475252	1
10	CpacitorCBB61(3.5uF/450VAC)	33010010	1
11	Supporter 1	01723006	2
12	Electric box	01413031	1
13	Capacitor CBB65(30uF/450VAC)	33000018	3
14	Supporter 2	01723007	1
15	Upper chassis assy	01203236	1
16	Rear side plate	01303007	1
17	Valve 3/8"	07103029	3
18	Valve1/4"	071302201	3
19	Valve support	01713044	1
20	Hexagonal nut	70310082	2
21	Terminal board RS9413G	42010178	1
22	Terminal board RS9413	42011104	2
23	Compressor 2P14S236A1J	00100253	3
24	Compressor overloading MRA99027	00180038	3
25	Compressor cushion	76710217	9
26	Capacitor clamp	02143401	1
27	Capacitor clamp	02143013	1
28	Isolation sheet sub-assy	01235253	1
29	Chassis assy	01203223	1
30	Handel	26235252	3
31	Front side plate assy	01305018	1

10 Care and maintenance

⚠ Warning

- Turn power off and pull out the power plug before cleaning air conditioner. Or it may cause the electric shock.
- Never dampen the air conditioner, it can cause the electric shock. And never sprinble water on the unit.
- Volatile liquid (e.g. thinner or gasoline) will damage the air conditioner. (So wipe the units with a dry soft cloth, or a cloth slightly moistened with water or cleanser.)

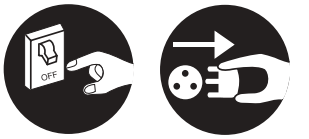

10.1 Clean the surface panel

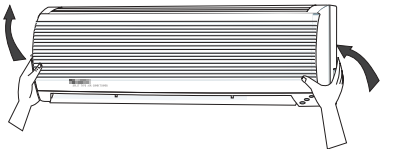

① Take down the front panel

Along the direction of arrows to pull of the front pannel an angle from the slots of the front pannel,then pull down the air filter and take it out.

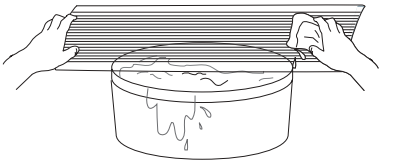

② Clean the front panel

Use a soft brush with little water and detergent to clean, then to dry it in the shade.

③ To install the front panel

To insert the supports of both sides into the supports' slot, and put the middle axis into the groove, then along the arrow direction to recover the front panel cover and clasp it.

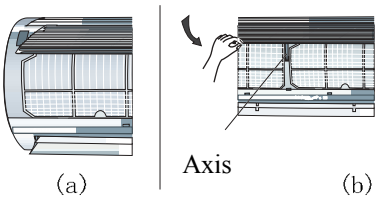

10.2 Clean the filter

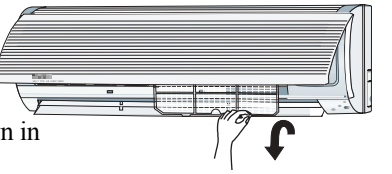

① Take down the filter

Along the direction of arrows to pull of the front pannel an angle from the slots of the front pannel,then pull down the air filter and take it out, as shown in the right Fig.

② Cleaning

To clear the dust adhering to the filters, you can either use a dust collector, or wash them with warm water(the water with the neutral deter-gent should below 45℃) when the filters are very dirty(such as oil stain),and dry it in the shadow.As shown in the right Fig.

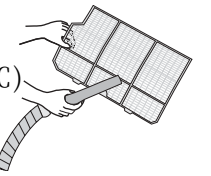

③ Reinsert the filter.

Reinsert the filters with side marked , pay attention to the front side, then to clasp the front panel cover.

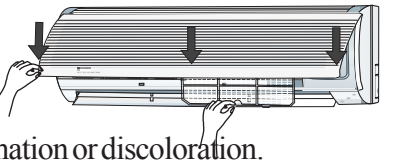

NOTE:

Never to put the front panel or filter directly under the sun.

Never to put the front panel or filter directly under the sun.
Never use water above 45℃ to wash the filters, or it could cause deformation or discoloration.
Never parch it by fire, or it could cause a fire or deformation.

11 Guide for installation

11.1 Selection of installation location

① Indoor unit

- The inlet and outlet should be far away from the obstructions so that the outflow air can reach all parts of the room.
- Install in a location from which the condensation water can be drained out conveniently and that is permitting easy connection with the outdoor unit.
- Avoid a location where there is heat source, steam or inflammable gas.
- Install in a location where is strong enough to withstand the full weight and vibration of the unit.
- Be sure that the installation conforms to the installation dimension diagram.
- Be sure to leave enough space to allow access for routine maintenance. The height of the installed location should be 200cm or more away from the floor.
- Install in a location where is 1m or more away from other electric appliances such as television, audio devices, etc.
- Select a location where is easy to remove and clean the filter.

② Outdoor unit

- Select a location from which noise and outflow air emitted by unit will not inconvenience neighbors.
- Select a location where there should be sufficient ventilation.
- If the unit installed in the sea side or the place where there is strong wind, the unit should be installed near the wall and make sure to use the board to prevent wind, in order to keep the fan normal running.
- Especially in the place of strong wind, should prevent the wind blow into the unit.
- Do not install the unit in to a closed place, there should be well ventialted.

NOTE:

Install in the following place may cause malfunction. If it is unavoidable, contact the dealer please.

- The place where oil (machine oil) is used.
- The place where a lot of salinities such as coast exists.
- The place where a sulfured gas such as the hot spring zones is generated.
- The palce where high-frequency waves are generated by radio equipment, welders and medical equipment.
- Other place with special circumstance.

11.2 Install the indoor unit

① Install the wall mounting frame

- To find a horizontal place by a lashing wire.
- Fix the wall mounting frame on the selected location with screws supplied with the unit.
- Be sure that the rear panel has been fixed firmly enough to withstand the weight of an adult of 60kg, furthermore, the weight should be evenly shared by each screw.

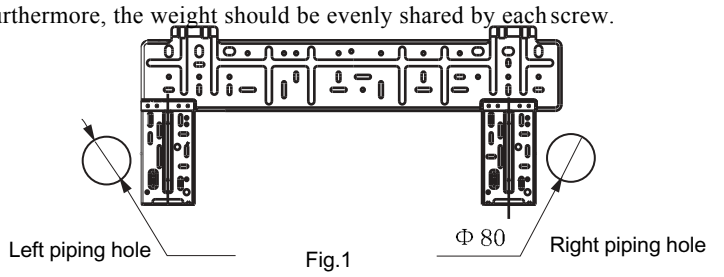

Fig.1

② Install the piping hole

- Make the piping hole (Φ50) in the wall at a slight downward slant to the outdoor side.(Shown in Fig. 1)
- Insert the piping-hole sleeve into the hole to prevent the connection piping and wiring from being damaged when passing through the hole.

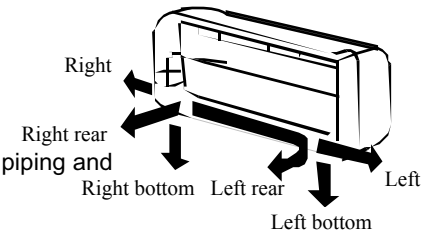

Fig. 2

③ Install the drainage hose

- For well draining, the drain hose should be placed at a downward slant.
- Do not wrench or bend the drain hose or flood its end by water
- As shown in Fig.2, the pipe could be lead out, from six direction, according to desire to select one of these.

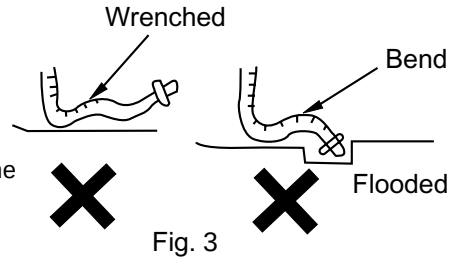

Fig. 3

④ Install the connection pipes

- Connect the connection pipes with the relevant union pipes of the indoor unit and tighten the flare nut of the connection pipes.

NOTE:

- **Connect the connection pipes with the indoor unit firstly and the outdoor unit secondly.**
- **Be careful in bending the connection pipes, or you will damage the pipes.**
- **If the tightening torque is too great in tightening the flare nuts, leakage will happen.**

⑤ Electric wiring

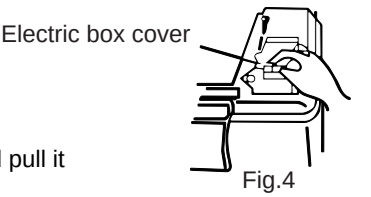

Fig.4

- Open the front panel.
- Open the cover of electric box
- Route the power connection cord from the back of the indoor unit and pull it toward the front through the wiring hole for connection.
- Connect the blue wire of the power connection cord to the terminal “N(1)”, the brown one to “2”, connect the red wire to "N3" and the yellow-green one to the earth wire.As shown in Fig.4, Fig.5.
- Recover the electric box cover.
- Recover the front panel.

NOTE:

- Wiring work should conform to national standard.
- All the electrical work must be done by qualified personnel according to the local rule and this manual.
- The rated voltage and the exclusive circuit must be used.
- Leakage circuit-breaker must be installed.
- The diameter of power cord should be large enough. Use the exclusive wire to replace the damaged

Fig.5

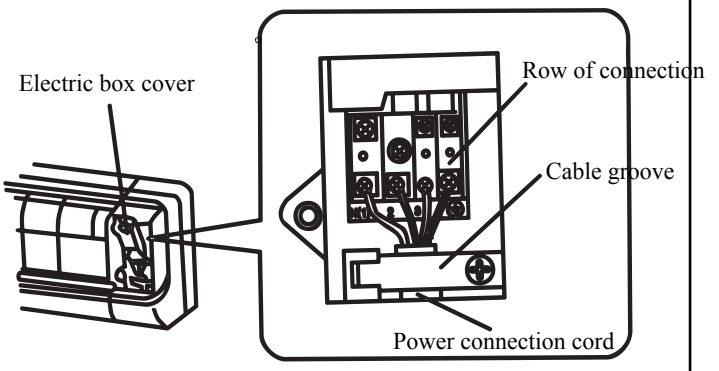

⑥ Install the indoor unit

- When routing the piping and wiring from the left or right side of the indoor unit,cut off the tailings from the chassis in necessary (Shown in Fig.6)

▼ Cut off the tailings 1 when routing the wiring only.
▼ Cut off the tailings 1 and tailings 2 when routing both the wiring and piping.

- Wrap the piping and wiring and pull them through the cut-off-tailings hole (Shown in Fig.7)
- To hang the indoor unit 's rear claw on the wall mounting frame hook, to press the bottom of the indoor unit, to make the hook of rear case clasp the wall mounting frame hook tightly, move the unit body left and right to check whether it is firmed or not, as shown in Fig.8, Fig.10.
- The height of indoor unit installation should above 2.3meters .
- Take two pieces of air cleaner screen from the attachment package, and insert them into the filters of indoor unit.
- The method of taking off the indoor unit:

Using thumbs to press the left and right keying of unit foreside "≡", to make the unit way from the wall mounting frame and take off the indoor unit upward, as shown in Fig.9

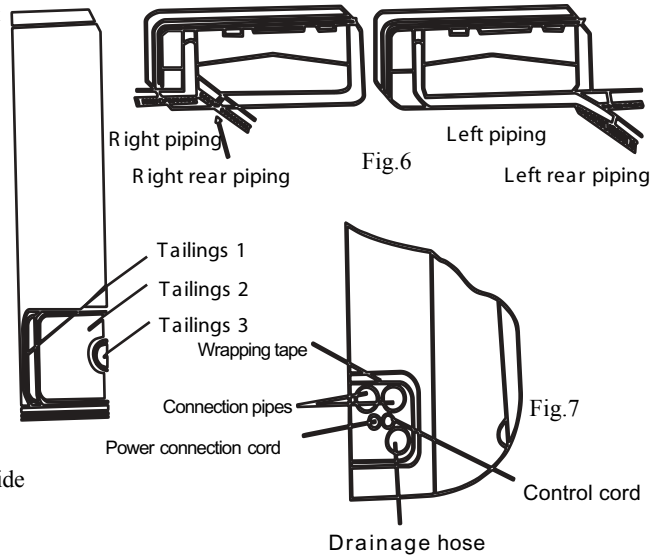

Fig.6

Fig.7

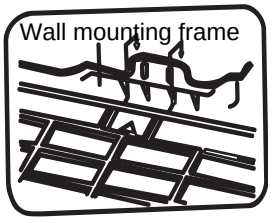

Fig.8

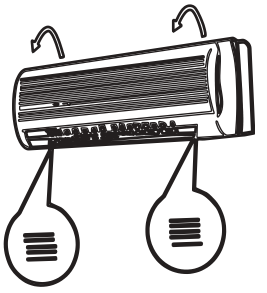

Fig.9

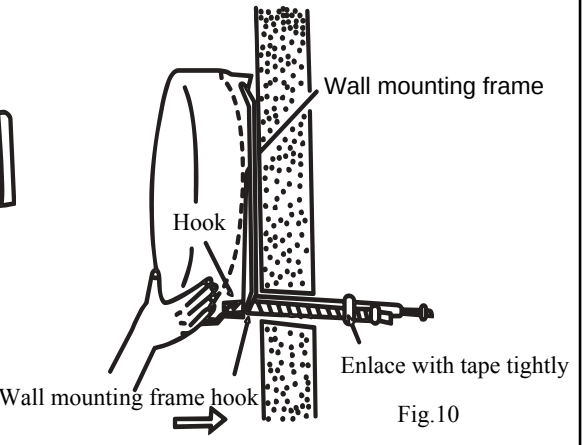

Fig.10

11.3 Install outdoor unit

▼ Use the bolts to fix the unit underframe.

▼ Ensure it is firmly fixed to prevent the earthquake or typhoon 's attack.

Make sure to install the water drainage pipe according to the rules of the manual.

If the water drainage pipe and connection pipe haven't been operated according to the requirement, that might cause the bad water drainage and cause damp and dirty.

Fig.11

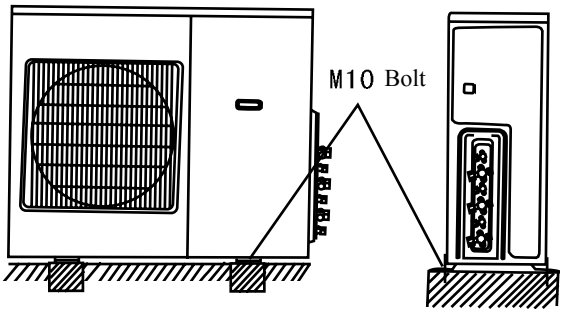

Fig.12

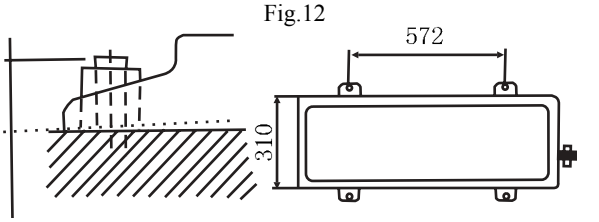

① Electric appliances connection

KF-(32+18x2)GW/A12 KF-(32+18x2)GW/NA12

	Indoor unit	Outdoor unit
Rated voltage	220-230V	220-230V
Over load current	10A	25A
Power cord	4G1.0	3X2.5

To loose the wire clamp bolt

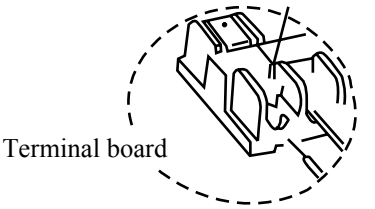

Fig.13

Warning:

o To make sure there isn't any wire are forgotten to connect.
Make sure the wire clamp bolt should fix the wire tightly, in order to avoid the wire escaped.
After connected well, to pull the connection wire slightly, to check whether it is movable or not.
If the connection is wrong, the unit can not run normally.

Fig.14

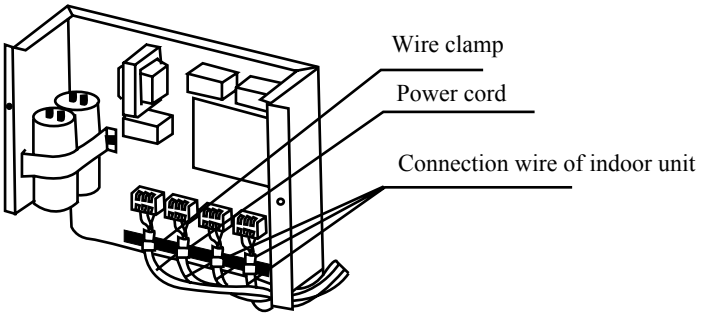

Warning

Make sure the electric box cover is earthed safely, otherwise it can cause electric shock due to the dust or raindrops.

② Install the connection pipe

● The length and height differences of connection pipe:

Unit	A	B	C
Indoor unit connection pipe length	Max. 20m	Max. 20m	Max. 20m
	Max. 30m		Max. 30m
Max. height diffrence	Max. 10m		Total 15m
No bending	Max. 10m	Max. 10m	Max. 10m
	Total 15m		Max. 15m

● If the length of connection pipe exceeds 10m, that should be added the refrigerant according to the requirement.

KF-(32+18x2)GW/A12 KF-(32+18x2)GW/NA12

Pipe length	A+B	C
Less or equal to 10m	Should not to add the refrigerant	Should not to add the refrigerant
10-30m	10g/m	10g/m

In the system, the indoor units of A and B are the cycling system, the indoor unit of C is cycling system, when they are running, make sure to keep each cycling system is running when the refrigerant is enough.

GSW(9x3)-22L/A

Pipe length	A	B	C
Less or equal to 10m	Should not to add the refrigerant	Should not to add the refrigerant	Should not to add the refrigerant
10-30m	10g/m	10g/m	10g/m

In the system, the A B and C are the cycling systems, when they are running, make sure to keep each cycling system is running when the refrigerant is enough.

● The dimension of connection pipe is dicided by the requirement of indoor unit load, according to the following form, to select the connection pipe dimension.

The valve dimension of outdoor unit

The valve dimension of outdoor unit		
A	Gas pipe	Φ 9.52
	Liquid pipe	Φ 6.0
B	Gas pipe	Φ 9.52
	Liquid pipe	Φ 6.0
C	Gas pipe	Φ 9.52
	Liquid pipe	Φ 6.0

● Prepare for connection pipe

1.Require that the gas pipe, liquid pipe should be insulated in order to avoid water condense.

2.Make the min.radius of bend 100mm.

● Connect the indoor unit connection pipe

Connect the corresponding gas pipe and liquid pipe.

To cover the refrigerant oil on the surface of connection pipe.

To screw down the nut of connection pipe with hands, and tighen the nut for 3 to 4times.

Fig.15

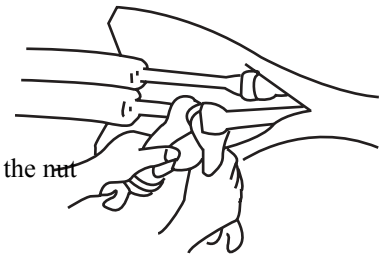

Tightening torque table

Connection pipe	Fig.15	
mm	N.M	kgf.cm
6.35	13.7to17.7	140to180
9.52	34.3to41.2	350to420

● Connect the outdoor unit connection pipe

The procedures of connecting the outdoor unit connection pipe is the same as that of indoor unit.

To screw down the nut of outdoor unit connection pipe with the same tightening torque.

● The process of thermal insulation

1.Wrap the joint of pipelines.

2. Make sure that the pipelines and including valves of outdoor unit are wrapped well.

3. To wrap from outside to inside with tape, the joint should be wrapped by adhesive tape.
When the pipelines pass through the ceiling, closet,etc. such as the places where the temperature is very high, and damp should increase the insulated material in order to avoid the water condense.

11.4 Charge the refrigerant

● To charge the unit A,B,C and the indoor units of A and B or C:

1.Connect the refrigerant tank to the gate of cut off valve.

2. To release the air of internal duct, until the discharged air is the cold air(could see "White Vapor") can judge the air has been exhausted.

Warning:

When charge the refrigerant, do not charge the liquid refrigerant, if the tank overturned, problem would happen. When the temperature is very low, can use the water under 40℃ to warm up the refrigerant,but can not use fire or steam to warm up!

Fig.16

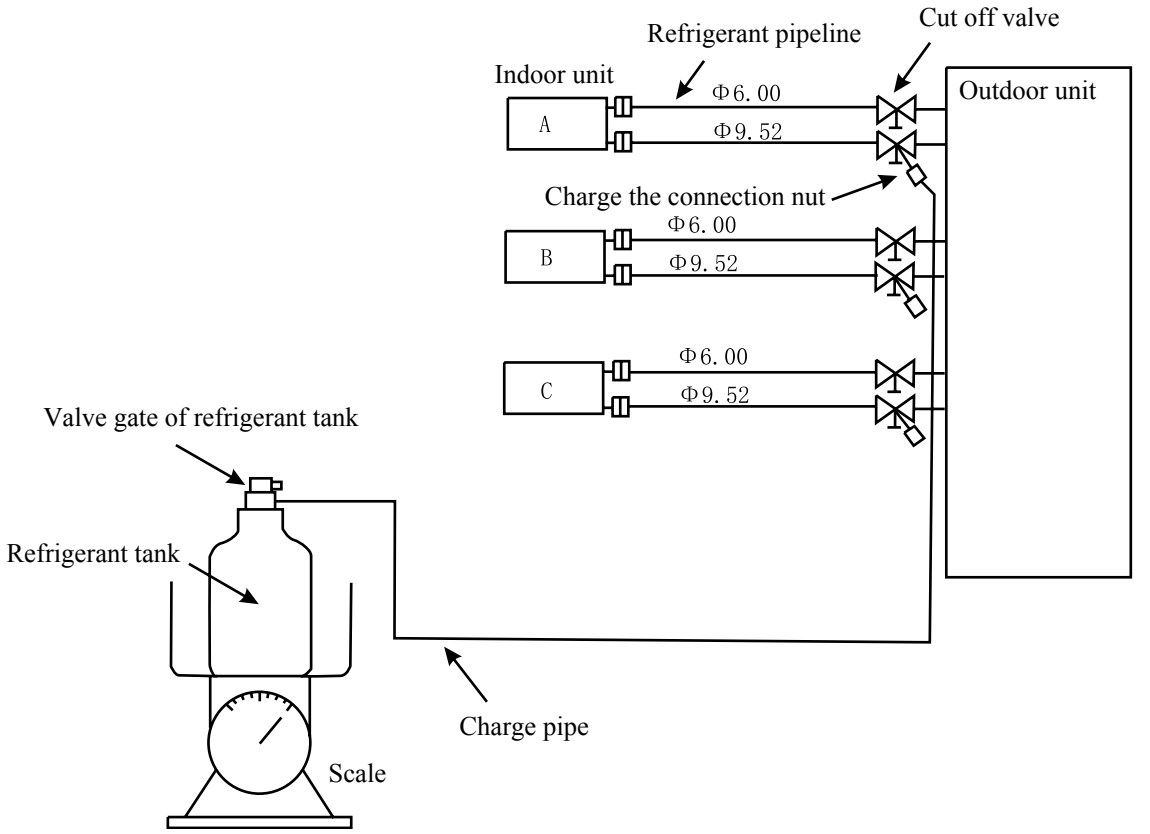

11.5 Air purging and leakage test

Fig.17

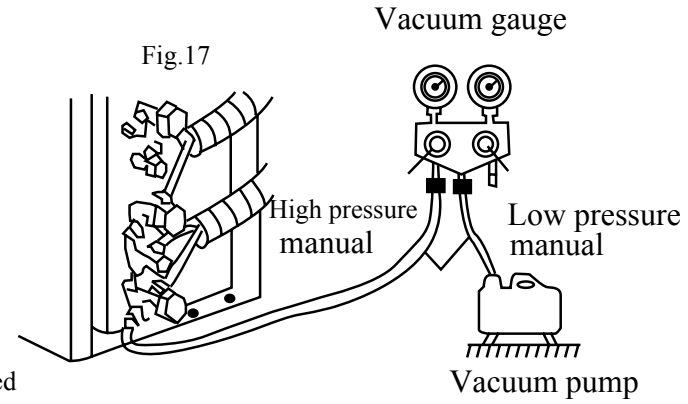

Make sure pipeline connection is completed

↓

Connect the manifold valve to the three -way valve, connect the charge pipe to the port.

↓

Make sure valve gate(two-way or three-way) is closed, and connect another charge pipe to the vacuum pump.

↓

Open the manifold valve Lo (low pressure) handle , and open vacuum pump, slightly pump, slightly to loose the nut of three-way valve to make sure let the air enter, after that, to screw down the screw cap of valve gate.(If the air don't enter, please check charge pipe is connected well or not.)

↓

After vacuumized for 15Min, and make sure the vacuum gauge is -760mmHg

↓

After finished the vacuum, to close the valvegate of manifold valve Lo, and stop the vacumm pump

↓

Tighten the valve gate nut of two-way or three-way valve to the end,and to open the valve fully.

↓

Close two-way or three-way valve gate.

↓

Leakage test
To check the unit leakage with soap water if there is bubble in the connection,that is leak.

↓

When the pipeline have leakage:
to screw down the nut of connection tightly, if it is still invalid after screw down, to release the detected gas entirely and rewelding the leakage position, then according to operation rules to vacuum and check leakage.

	Tightening torque	
	N.M	kgf.cm
Connect the terminal	13.7-17.7	140-180
Valve gate terminal	19.6-29.4	200-300

When there is gas leakage:
To screw down the nut of connection pipe joint, if it is still leak, should release the gas, and recharge the refrigerant with suitable volume.

Warning:

When installing and moving the unit, do not interfuse other substances into the refrigerant. If the air has entered, when the refrigerant is circulating, it will produce the abnormal high temp.and might explode in a certain degree!!!

11.6 Test operation and check after installation

① Test operation

- Do not switch on power before installation is finished completely
- Electric wiring must be connected correctly and securely
- Cut-off valves of the connection pipes should be opened.
- All the impurities such as scraps and thrums must be cleared from the unit.

② Test operation method

- After power on, press "ON/OFF" of wireless remote control press "MODE"button, select ❄ 、 ⚙ 、 ✿ mode to check if it can run normally.
- Emergency running:

When the wireless remote control is lost, could use the penpoint of ball pen operate as following: Microcomputer will accord to the indoor temperature to select COOL, HEAT,FAN in order to obtain the comfortable effect. When it is running, set the manual switch to "STOP", air conditioner will stop running.

Fig.18

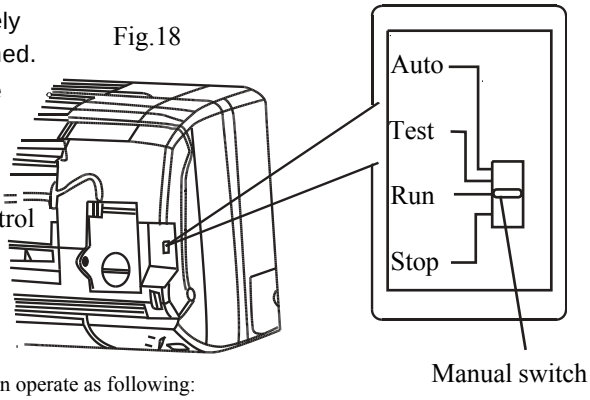

NOTE: “ TEST ” is only used for the unit test, the unit will not be limited and operated forcedly by the temperature. Please do not swith over to the position, when the unit is operations.

③ Check after installation

Items to be checked	Possible malfunction
Has it been fixed firmly?	The unit may drop, shake or emit noise.
Have you done the refrigerant leakage test?	It may cause insufficient cooling (heating) capacity
Is heat insulation sufficient?	It may cause condensation and dripping.
Does the unit drain well?	It may cause condensation and dripping.
Is the voltage in accordance with the rated voltage marked on the nameplate?	It may cause electric malfunction or damage the part.
Is the electric wiring and piping connection installed correctly and securely?	It may cause electric malfunction or damage the part.
Has the unit been connected to a secure earth connection?	It may cause electrical leakage.
Is the power cord specified?	It may cause electric malfunction or damage the part.
Has the inlet and outlet been covered?	It may cause insufficient cooling (heating) capacity
Has the length of connection pipes and refrigerant capacity been recorded?	The refrigerant capacity is not accurate.

12 Trouble shooting

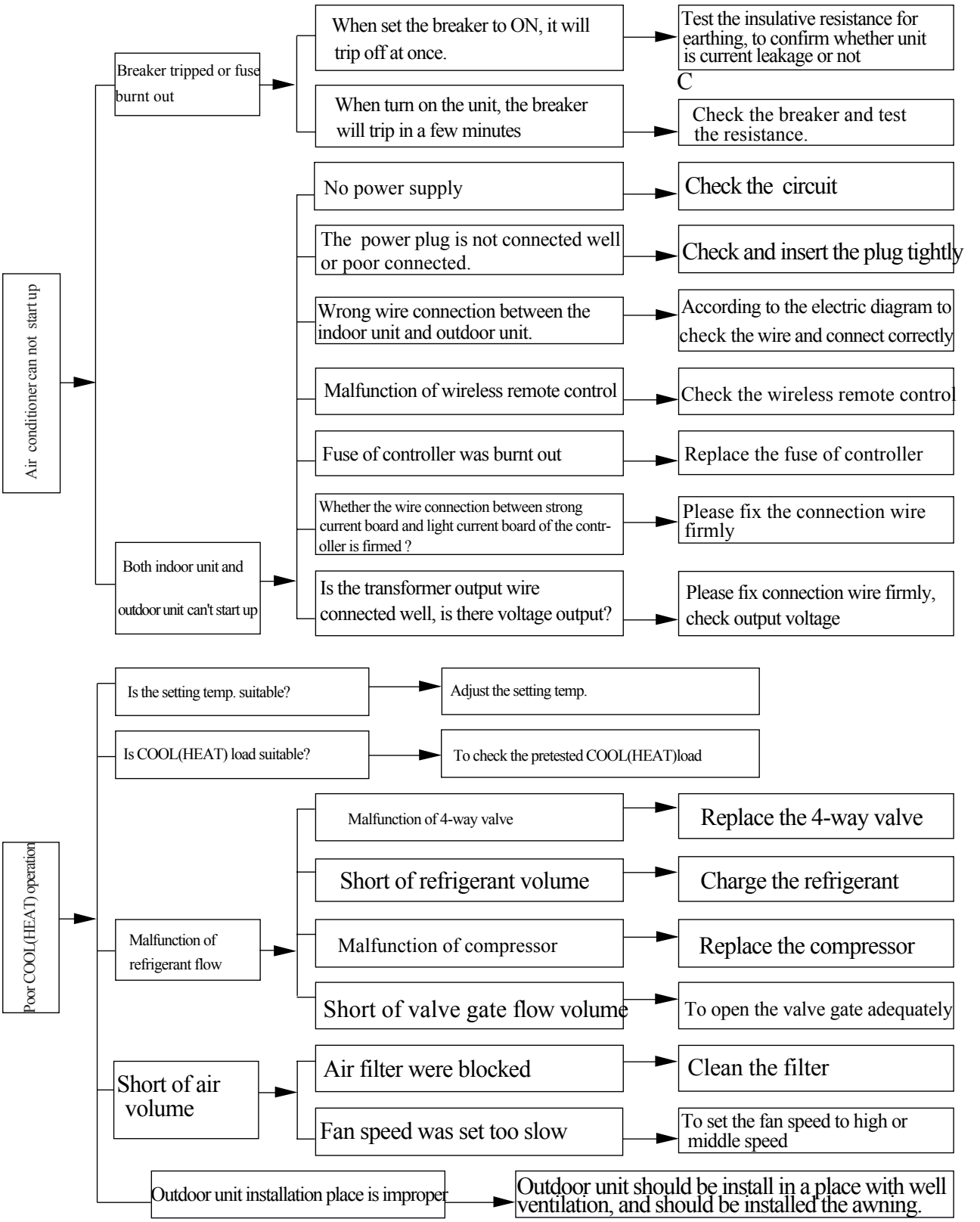

Poor COOL(HEAT) operation	Indoor unit filter was blocked	To clean the filter regularly
	The outdoor unit heat exchanger was blocked	To clean the adhesive dust on heat exchanger
	Leakage between compressor high pressure and low predssure	Replace the compressor
	Some part of capillary was blocked	Replace the capillary
	Refrigerant leakage	Check leakage and charge refrigerant
	Outdoor unit one-way valve was blocked	Replace one-way valve
Set the fan operation the motor doesn't run	Indoor fan motor burnt out or disconnected	Mend or replace the fan motor
	The wire is wrong connected	To connect the wire according to electric diagram
	Fan capacitor tripped off or broken	Replace the same model and type fan motor capacitor
When in COOL, HEAT mode,the outdoor unit and compressor do not work	Loop of relay was disconnected	Replace the relay
	Poor connected of relay	Replace the relay
	The setting temp. was improper	To adjsut the setting temp.
When in COOL, HEAT mode, compressor works, but outdoor unit does not work	Outdoor fan motor was broken	Replace the fan motor
	The wire is wrong connected	To connect the wire according to electric diagram
	Outdoor fan motor capacitor was broken	Replace the fan motor capacitor
When in COOL, HEAT mode, outdoor unit works, compressor doesn't work	Compressor malfunction	Replace the compressor
	Compressor run capacitor was broken	Replace the capacitor
	Voltage is too low or too high	To equip the manostat
	The wire is wrong connected	To connect the wire according to electric diagram
Water leakage	Water drainage pipe was blocked or broken	Replace the drainage pipe

Water leakage	The joint of refrigerant pipe was not wrapped tightly	Wrap again tightly
Abnormal sound and vibration	Indoor fan touched other part	Adjust the fan position
	There is abnormal thing in the indoor unit	Take out the abnormal thing
	Compressor shakes terribly	Adjust the compressor support pad, tighten the loose bolts
	Outdoor unit pipelines collide with each other	Divede the collided pipelines
	Indoor unit metal sheet collide with each other	1.Connect the bolt tightly 2.Stick the damping between the metal sheets.
	Outdoor unit fan blade collide with body case	Adjust the fan blade position
	Abnormal sound in compressor	Replace the compressor
	Abnormal electricmagnetic sound in 4-way valve when in HEAT mode	Solenoid valve is short circuit, replace the solenoid valve